CITY OF NEWBURGH
COUNCIL MEETING AGENDA
SESION GENERAL DEL CONSEJAL
November 27, 2017
7:00 PM

Mayor/Alcaldesa

1. Prayer/Rezo
2. Pledge of Allegiance/Juramento a la Alianza

City Clerk:/Secretaria de la Ciudad

3. Roll Call / Lista de Asistencia

Communications/Communicaciones

4. Approval of the minutes of the meeting of November 13, 2017
   Aprobación del acta de la reunión del 13 de noviembre de 2017
5. City Manager Update

Presentations/Presentaciones

6. New York State Department of Conservation will present their Roll out plan for the new upgrades at the Water Treatment Plant
   El Departamento de Conservación del Estado de Nueva York presentara su plan de establecimiento de las nuevas actualizaciones a la Planta de Tratamiento del Agua.

Comments from the public regarding agenda and general matters of City Business/Comentarios del público con respecto a la agenda y sobre asuntos generales de la Ciudad.

Comments from the Council regarding the agenda/Comentarios del Consejo con respecto a la agenda

City Manager's Report/ Informe del Gerente de la Ciudad

7. Resolution No. 324-2017 - Proposal with QUEST for Asbestos Abatement Monitoring Services at Washington Lake & Masterson's Park

   Resolution authorizing the City Manager to accept a proposal and execute an agreement with Quality Environmental Solutions & Technologies, Inc. in the amount of $4,630.00 for asbestos abatement management and third-party air monitoring services for the Washington Lake and Masterson Park trailers. (Jason Morris)

   Una resolución autorizando al Gerente de la Ciudad a aceptar una

propuesta y ejecutar un acuerdo con "Quality Environmental Solutions & Technologies, Inc." Por el monto de $4,630.00 para la administración de la reducción de amianto y servicios de monitoreo aéreo de terceros para los remolques en el Lago Washington y el Parque Masterson. (Jason Morris)

8. Resolution No. 325 - 2017 - NYCDEP Permit Transfer to City of Newburgh for Water Supply Improvements

   Resolution accepting the transfer of the New York City Department of Environmental Protection Land Use Permit for Catskill Aqueduct connection improvements at Browns Pond from the New York State Department of Environmental Conservation to the City of Newburgh (Jason Morris)

   Una resolución aceptando la transferencia del Permiso de Uso de Tierras del Departamento de Protección Ambiental de la Ciudad de Nueva York para mejoras en las conexiónes del Acueducto de los Catskill's en el Lago Brown del Departamento de Conservación Ambiental del Estado de Nueva York para la Ciudad de Newburgh. (Jason Morris)

9. Resolution No. 326 - 2017 - NYS DEC Water Agreement (1 Year Ext)

   Resolution authorizing the City Manager to enter into an amendment to the Agreement with the New York State Department of Environmental Conservation to extend the term of the Agreement for reimbursement of the cost of water purchased from the New York City Catskill Aqueduct (Katie Mack, Michelle Kelson)

   Una resolución autorizando al Gerente de la Ciudad a entrar en una enmienda al acuerdo con el Departamento de Conservación Ambiental del Estado de Nueva York para extender el plazo del acuerdo para el reembolso del costo del agua comprada del Acueducto de Catskill de la Ciudad de Nueva York. (Katie Mack y Michelle Kelson)

10. Resolution No. 327 - 2017 Budget Transfer from Legislative Body to the Human Rights Commission

    Resolution amending Resolution No. 310A-2016, the 2017 Budget for the City of Newburgh, New York to transfer $571.43 from Legislative Body-Travel and Conference and $157.14 from Legislative Body-Education to the Human Rights Commission (Katie Mack)

    Una resolución enmendando la Resolución No. 310A-2016, el Presupuesto del 2017 de la Ciudad de Newburgh, Nueva York para transferir $571.43 del Cuerpo Legislativo – Viajes y Conferencias y $157.14 del Cuerpo Legislativo – Educación a la Comisión de Derechos Humanos. *(Katie Mack)*

11. Resolution No. 328 -2017 - A License Agreement with Scenic Hudson for Trail Improvements to Crystal Lake and Snake Hill

Resolution authorizing the City Manager to enter into a license agreement with Scenic Hudson, Inc. to allow access to City-owned property around Crystal Lake for trail improvements. (Michelle Kelson & Deirdre Glenn)

Una resolución autorizando al Gerente de la Ciudad a entrar en un acuerdo de Licencia con "Scenic Hudson" para permitir el acceso a Propiedades de la Ciudad alrededor del Lago "Crystal" para mejoras de caminos. (Michelle Kelson y Deirdre Glenn)

12. Resolution No. 329 -2017 Hold a Public Hearing to Discuss the City's Potential Application for a Restore NY Grant for the Dutch Reformed Church and the City Club

    Resolution scheduling a public hearing for December 11, 2017 to hear public comment concerning the City of Newburgh Restore NY grant application to support the redevelopment of the Dutch Reformed Church and the City Club by Alembic Community Development. (Deirdre Glenn & Michelle Kelson)

    Una resolución programando una audiencia pública para el 11 de diciembre de 2017 para escuchar comentarios públicos con respecto a la subvención "Restore NY" solicitada por la Ciudad de Newburgh para apoyar la reconstrucción de la Iglesia Holandesa Reformada y el Club de la Ciudad por "Alembic Community Development". (Deirdre Glenn y Michelle Kelson)

13. Resolution No. 330 -2017 - Purchase of 7 Locust Street

    Resolution to authorize the conveyance of real property known as 7 Locust Street (Section 25, Block 5, Lot 18) at private sale to Jimmy R. Mera for the amount of $25,000.00. (Deirdre Glenn)

    Una resolución para autorizar el traspaso de bienes raíces conocidas como la 7 de la Calle Locust (Sección 25, Bloque 5, Lote 18) en una venta privada a Jimmy R. Mera por el monto de $25,000.00. (Deirdre Glenn)

14. Resolution No. 331 -2017 A contract with The Newburgh Ministry for operation of a shelter at 104 S. Lander Street

    Resolution authorizing the City Manager to enter into an agreement with the Newburgh Ministry, Inc. to establish a Warming Center at 104 South Lander Street. (Michelle Kelson & Deidre Glenn)

    Una resolución autorizando al Gerente de la Ciudad a entrar en un acuerdo con el "Newburgh Ministry, Inc." Para establecer un Centro de Calentamiento en la 104 de la Calle South Lander. (Michelle Kelson y Deirdre Glenn)

15. Resolution No. 332-2017 To Certify Base Percentages, Current Percentages, Current Base Proportions and Adjusted Base Proportions of the Real Property Tax Law

A Resolution to Certify Base Percentages, Current Percentages, Current Base Proportions and Adjusted Base Proportions under the homestead option of Article 19 of the Real Property Tax Law of the State of New York.

Una resolución para certificar porcentajes de base, porcentajes actuales, la base actual de proporciones y base ajustadas bajo la opción “Homestead” del Artículo 19 de la ley de impuestos sobre bienes raíces del Estado de Nueva York.

16. Resolution No. 333-2017 Adopting the Budget for the Fiscal Year 2018
A Resolution Adopting the Budget for the Fiscal Year 2018.

Una resolución adoptando el Presupuesto para el Año Fiscal 2018.

Old Business: / Asuntos Pendientes

New Business: / Nuevos Negocios

Final Comments from the City Council/ Comentarios Finales del Ayuntamiento:

Adjournment/ Aplazamiento:

RESOLUTION NO.: 324 - 2017

OF

NOVEMBER 27, 2017

A RESOLUTION AUTHORIZING THE CITY MANAGER TO ACCEPT A PROPOSAL AND EXECUTE AN AGREEMENT WITH QUALITY ENVIRONMENTAL SOLUTIONS & TECHNOLOGIES, INC. IN THE AMOUNT OF $4,630.00 FOR ASBESTOS ABATEMENT MANAGEMENT AND THIRD-PARTY AIR MONITORING SERVICES FOR THE WASHINGTON LAKE AND MASTERSON PARK TRAILERS

WHEREAS, the City of Newburgh intends to remove two abandoned trailers located at Washington Lake and Masterson Lake; and

WHEREAS, the removal work presumes the presence of asbestos containing material which must be abated in compliance with law, rule and regulation; and

WHEREAS, Quality Environmental Solutions & Technologies, Inc. has submitted a proposal for asbestos abatement management and monitoring and third-party asbestos air monitoring for the removal of the abandoned trailers located at Washington Lake and Masterson Lake; and

WHEREAS, the cost for these services will be $4,630.00 and funding shall be derived from F.1440.0448; and

WHEREAS, the City Council has reviewed the annexed proposal and has determined that such work would be in the best interests of the City of Newburgh;

NOW, THEREFORE, BE IT RESOLVED, by the Council of the City of Newburgh, New York that the City Manager be and he is hereby authorized to accept a proposal and execute an agreement with Quality Environmental Solutions & Technologies, Inc. for asbestos abatement management and monitoring and third-party asbestos air monitoring at a cost of $4,630.00 for the removal of abandoned trailers located at Washington Lake and Masterson Lake.

QuES&T

Quality Environmental Solutions & Technologies, Inc.

November 09, 2017

City of Newburgh
83 Broadway
Newburgh, NY 12550

ATTN: Jason C. Morris

Via E-mail: JMorris@cityofnewburgh-ny.gov

Re.: Washington Lake Trailer & Masterson Park Trailer
Request for Proposal – Asbestos Abatement Short Specification, Bidding & Abatement Monitoring Services

Dear Mr. Morris,

Quality **E**nvironmental **S**olutions **& T**echnologies, Inc. **(QuES&T)** is pleased to submit the attached proposal to prepare a Short Specification with Bid Documents outlining the scope of work, Conduct Onsite Walkthrough w/Prospective Bidders and provide Monitoring Services during abatement at the Washington Lake Trailer and Masterson Park Trailer.

QuES&T is a NYS Certified Minority Business Enterprise committed to remaining a leader in the environmental training and technical consulting industry. **QuES&T**'s extensive Nuclear Power Industry experience makes us uniquely qualified to provide technical support in state-of-the-art techniques for engineering and contamination control. Additionally, this experience enables us to integrate the essential concepts of "critical path" schedules and minimizing personnel exposures while maintaining a high level of attention to the specific details of each project. **QuES&T** personnel satisfy numerous ANSI and NUREG experience requirements of the Nuclear Regulatory Commission. Our staff has served in various capacities in the Health Physics and Nuclear Engineering disciplines in operational power reactors, nuclear powered vessels, radio-pharmaceuticals and government prototypes.

We are confident you recognize that selection of a qualified technical consultant for professional services, such as pre-construction inspection, project design, project management and air monitoring, represents a step as critical as selecting a reputable environmental remediation contractor. **QuES&T** feels strongly that the success of any remediation project is defined primarily in the planning and design phase. A technically sound project design combined with proper oversight provides the most cost-effective solution and ensures the gains recognized are not at the expense of future liability to the City of Newburgh.

In this regard, **QuES&T** has successfully completed remediation projects, for our client companies, in support of Nuclear and Fossil commercial power plant maintenance outages, facility renovation and demolition, cGMP facility upgrades, recovery from contamination following catastrophic events (e.g. steam line explosions, fires), school building renovations, Corporate asbestos management programs, facility Operations & Maintenance (O&M) programs, UST removals, sub-surface investigations, contaminated soil remediation, LBP stabilization and commercial/residential asbestos & lead abatements.

Technical consulting services are available in the area of regulatory compliance audits, OSHA safety, air monitoring, respiratory protection, laboratory services, building hazard assessments (EPA, HUD, commercial), LBP Risk Assessments, management plans, NYS/NESHAP pre-demolition inspections and full scope project management; including development of remediation response actions and management of all required project and personnel records. Our staff of experienced environmental professionals can prepare all required specifications and procedures to ensure your programs comply with federal, state and municipal regulatory requirements.

QuES&T offers a wide range of OSHA and environmental safety training. Our full range of asbestos safety certification training ensures that our client's employees receive the appropriate training to maximize their safety and minimize your liability. **QuES&T** offers accredited initial and refresher training programs for Operations & Maintenance (O&M), Asbestos Abatement Workers and Supervisors, Project Monitors, Asbestos Project Sampling Technicians (RH-II), Asbestos Project Designers, Asbestos Inspectors (RH-III) and Management Planners. Our accredited training facility (EPA, NYS) contains the most modern equipment to support the hands-on portion of each training program. On-site training services are available for groups of at least twenty-five students and can be tailored to meet the specific needs of the City of Newburgh.

QuES&T provides a full range of services in the area of Respiratory Protection. Our technical staff has extensive experience in the development of regulatory compliance programs for NUREG 0041 and OSHA 1910.134 Respiratory Protection Programs. Quantitative or qualitative respirator fit services can be provided at **QuES&T**'s facility or yours.

For additional information concerning this submittal, please contact us at (845) 298-6031. We look forward to working with the City of Newburgh in the environmental consulting and remediation services area.

Sincerely,

Rudy Lipinski - LEED®AP
Director of Field Operations
NYS/AHERA Inspector/Project Designer
Cert. #AH 05-09049

ASBESTOS ABATEMENT SHORT SPECIFICATION, BIDDING & ABATEMENT MONITORING SERVICES for CITY OF NEWBURGH 83 Broadway Newburgh, NY 12550 At WASHINGTON LAKE TRAILER & MASTERSON PARK TRAILER 660 Little Britain Road Newburgh, New York 12550

QuES&T agrees to provide the following services:

Asbestos Abatement Specification w/Bid Documents (Short Spec) & Bidding Process

- Develop asbestos-abatement specific contract documents and detailed work scopes for the purpose of securing competitive bidding to perform asbestos abatement.
- Conduct onsite pre-bid walk through with Environmental Remediation Contractors and prepare addendum as needed to resolve outstanding issues prior to bid due date.
- Review completed bids and contractor submittals for accuracy and content, and assist the **City of Newburgh** in the selection of an Environmental Remediation Contractor.

Asbestos Abatement Management and Monitoring

Item 1: Supervision of Abatement Activities (Combined Project Monitor/Air Sampling Technician)

- Perform project monitoring, inspection and acceptance of the work.
- Provide coordination to ensure timely completion of the asbestos removal.
- Review construction phasing plans and assist in the coordination of the activities of the various contractors and building occupants to ensure compliance with applicable federal, state and municipal regulatory requirements and bid specifications.
- Complete work step lists and documentation packages for final closeout.

Item 2: Third Party Asbestos Air Monitoring

- **QuES&T** will provide collection and laboratory analysis of the required air samples, in conjunction with Item 1, on a cost per sample basis. To maintain compliance with the requirements of 56-4.3, analysis of the air samples shall be by "an independent laboratory conforming to the requirements of 12 NYCRR 56-4.2". The sampling frequency will be as specified in Title 12 NYCRR Rule 56; Subpart 56-4 and any NYS DOL Applicable Variance or Site Specific Variances utilized in the conduct of this project.

ASBESTOS ABATEMENT SHORT SPECIFICATION,
BIDDING & ABATEMENT MONITORING SERVICES
for
CITY OF NEWBURGH
83 Broadway
Newburgh, NY 12550
At
WASHINGTON LAKE TRAILER
& MASTERSON PARK TRAILER
660 Little Britain Road
Newburgh, New York 12550

- **ASBESTOS ABATEMENT SPECIFICATION (SHORT SPEC) & BIDDING PROCESS**
  - Develop Abatement Work Scopes with Bid Documents $ 1,950.00
    - Including SmartDraw Drawing Development
  - Conduct Onsite Walkthrough w/Prospective Bidders $ 350.00

Lump Sum Total: $ 2,300.00

- **ASBESTOS ABATEMENT MANAGEMENT AND MONITORING SERVICES**

Project Management Labor (1 PM, 2 Hours @ ($90/hour)	$ 180.00
Project Monitor "Weekday" Labor (1 Tech, 5 Shifts @ $400/shift)	$ 2,000.00
Travel and Misc. Materials	$ 150.00
Estimated Total	**$ 2,330.00**

NOTES:
1. ***Client shall be charged for actual services rendered and/or samples analyzed.***

ACCEPTANCE OF PROPOSAL #P17-5518

To Execute This Agreement, Please Review, Sign, Date & Return to QuES&T.
Payment Terms: Payment Shall Be Net 15 Days; Following Delivery Of Final Report; Late Payments Shall Be Assessed a Penalty of 1.5% per Month.

City of Newburgh – Jason C. Morris:

By _____ _____ _____

Signature *Print Name & Title* *Date*

RESOLUTION NO.: 325 - 2017

OF

NOVEMBER 27, 2017

A RESOLUTION ACCEPTING THE TRANSFER OF THE NEW YORK CITY DEPARTMENT OF ENVIRONMENTAL PROTECTION LAND USE PERMIT FOR CATSKILL AQUEDUCT CONNECTION IMPROVEMENTS AT BROWNS POND FROM THE NEW YORK STATE DEPARTMENT OF ENVIRONMENTAL CONSERVATION TO THE CITY OF NEWBURGH

WHEREAS, the New York State Department of Environmental Conservation (the "DEC") previously applied for and received land use permit No. 10,171 and project No. 2513 from the New York City Department of Environmental Protection (the "DEP") for the modification of City of Newburgh water supply connection to the Catskill Aqueduct west siphon for the purpose of transporting Aqueduct water to the City of Newburgh's Browns Pond Pumping Station, and to the newly constructed blow-off structure to convey aqueduct water to fill Brown's Pond; and

WHEREAS, the construction of the City of Newburgh water supply connection improvements to the Catskill Aqueduct are complete and the DEC proposes to transfer to the City the DEP land use permit for the Catskill Aqueduct improvements at Browns Pond; and

WHEREAS, funding for the fees associated with the transfer of the land use permit shall be derived from the Water Fund; and

WHEREAS, this Council has determined that accepting the transfer of the DEP land use permit from the DEC entering into such contract is in the best interests of the City of Newburgh;

NOW, THEREFORE, BE IT RESOLVED, by the Council of the City of Newburgh, that the of Newburgh accepts the New York City Department of Environmental Protection land use permit No. 10,171 and project No. 2513 from the New York State Department of Environmental Conservation for the Catskill Aqueduct improvements at Browns Pond and that the City Manager is authorized to execute all such contracts and documentation and take such further actions as may be appropriate and necessary to accept land use permit and administer the programs approved by said permit.

APPLICATION FOR USE OF CITY–OWNED WATER SUPPLY LANDS:

Revocable Land Use Permit

☐ New Permit

☒ Change to existing Permit/Project No.: 10171/2513

☐ Renewal of Permit/Project No.: _____

NRM FORM

(Standard Form)

Latest Version 8/18/2017

FOR LM USE ONLY

NOTE: This form is to be used for requesting permission to use City-owned water supply lands for such uses including, but not limited to: driveways/access, bridges, parking, utilities, signs, wells, facility construction, and environmental remediation in which a fee is charged by the City. The Applicant must be the entity who is responsible for the Project, compliance with the requirements, paying the fees. Before completing and submitting this application, the Applicant is encouraged to review the entire form, along with the Standard Conditions (page 4) and schedule a pre-application meeting with the appropriate DEP Project Manager. Information provided in this application is used for internal DEP review and determination.

Project Number 2609 (reassignment)

Date Received

Section, Block, Lot: 32-2-52

PID:

Taking Info:

1. Name and address of Applicant *(include zip code)*

Michael Ciaravino
City Manager
City Hall
83 Broadway
Newburgh, NY 12550

2. Name and address of Contact

Jason Morris, PE
City Engineer
City Hall
83 Broadway
Newburgh, NY 12550

3. Telephone *(area code)*

845-569-7301
845-569-7448
Fax *(area code)*

4. E-Mail address

MCiaravino@cityofnewburgh-ny.gov
JMorris@cityofnewburgh-ny.gov

5. Title of project and goals of the Project

City of Newburgh Catskill Aqueduct west siphon connection and blow-off to Brown's Pond

6. Requested/Proposed/Projected start and end date (if applicable):

Project completed in 2017

7. Estimated time frame for use of City property (i.e. 1 day, 7 days, 5 months, 3 years, ongoing)

Ongoing

8. Project description *(describe in detail)*: (a) type of land use requested; (b) related structures and facilities; (c) physical specifications including number, quantities, sizes, capacity, etc; (d) time of year of use; (e) volume or amount of material to be transported; (f) duration and timing of construction; (g) temporary work areas needed for construction; (h) references for further information; (i) estimated cost of Project; (j) impact to local residents (k) impacts to City-owned land *(attach additional plans and sheets if more space is needed* (l) other DEP reviews begun/anticipated and contact information.

(a) Transfer of previously issued land use permit No. 10,171 and project No. 2513 from NYSDEC to City of Newburgh. (b) Modification of City of Newburgh water supply connection to Catskill Aqueduct west siphon for the purpose of transporting Aqueduct water to the City of Newburgh's Browns Pond Pumping Station, and to the newly constructed blow-off structure to convey aqueduct water to fill Brown's Pond. (c) Check valve vault[new], control valve vault[new], air release manhole[new], 210' of 24" DIP[new], meter pit[existing], discharge structure[existing], underground electric cable[existing], 2"conduit[existing], aerial electric cable[existing], three utility poles[existing], 45' of 10" DIP[existing]. (d) 365 days per year. (e) All cut & fill areas have been completed and stabilized. No additional earthwork is necessary. (f) Project improvements have been completed and as-builts are attached to this permit transfer application. (g) None. (h) N/A (i) $915,110 (j) There are no residences within the vicinity of the project site. (k) As-builts showing the impacts to NY City owned lands have been included with this land use permit transfer application. (l) None.

9. Attach a location map covering the area and show the location of the Project and closest City boundary lines

As-built maps of improvements are attached.

10. Street or physical location	11a. County	12a. Town tax map number of City land to be used
115 Moores Hill Road New Windsor, New York 12553	Orange	SBL: 32-2-52
	11b. Town/Village Town of New Windsor	12b. Town tax map number of parcel to be serviced SBL: 32-2-52
13. Access location information Access is through a City of Newburgh owned Parcel (SBL: 32-2-15) located at 115 Moores Hill Road in the Town of New Windsor.	14. NYC property identification (if known)	15. Area of City property impacted by Project

16. Attach four (4) copies of any detailed site plan(s)/map(s)

Four copies of the as-built drawings are attached.

17. Federal, State, or Local approvals including SEQR *(check one)*

a. ☐ Attached
b. ☐ Applied for (attach copy of application)
c ☐ Will be applied for
d. ☒ Not required

Description: The New York State Department of Environmental Conservation constructed the upgrades under their Superfund authority.

18. Does access to the site on or over City land need improvement or maintenance? *(explain)*

The City of Newburgh owns several drinking water related assets on City of New York property. These assets are access by City of Newburgh personnel via a permitted access road over the Catskill Aqueduct. This access road requires plowing of snow and occasional addition of stone to the gravel surface travelled by vehicles.

19. Will any soil, fill material, plants, animals, or other materials including hazardous materials be brought onto the site and/or removed from the site? *(explain)*

No.

20. Are any new impervious surfaces, structures, or improvements proposed? *(explain)*

Construction of the drinking water supply upgrades were completed in 2017. No additional impervious surfaces, structures or improvements are proposed.

21. What ongoing maintenance requirements may result and how will these be addressed? *(explain)*

The City of Newburgh owned appurtenances only require regular maintenance involving inspection and exercise of valves and related equipment. Occasionally, the access road will require snow plowing and occasional replacement of any lost stone from the driving surface.

22. Identify individuals, contractors, employees, groups, etc. and their affiliation that may visit site

City of Newburgh Water Department, Department of Public Works, Engineering Department, and Executive Office Staff.

See Page 4 for Required Signature

GENERAL INFORMATION

This application is used to request permission from the Deputy Commissioner of the Bureau of Water Supply for use of City-owned land for various types of activities allowed by the City. It initiates a review process that examines the proposal for consistency with the City's land management goals, deed and easement restrictions, the watershed rules and regulations, state environmental quality review act, and other ongoing or planned activities. Review and approval is required for all activities that will occur on City-owned land.

Applicants are encouraged to schedule a pre-application meeting with the DEP project manager listed below. Many times, with the help of the DEP Project Manager, this form can be completed at the pre-application meeting.

Matthew Castro / LUP Administrator

DEP Project Manager / Title

(914) 749-5350 / mcastro@dep.nyc.gov

Phone number / e-mail

SPECIFIC INFORMATION

(Items not listed are self-explanatory)

Item 1 This must be the entity that is applying for the Land Use Permit and will be the Responsible Party. Use municipality, company, individual, etc. for whom the Permit is for. Address provided will be where all invoices, Permits, and other correspondence will be mailed to.

Item 2 List contact information for the person (s) who is managing the project and/or the contact if different than Item 1. Examples include: Project Manager, Executive Director, government official, project contact, etc.

Item 5 Provide the Title, if any, of the Project and explain what the overall goals for the Project are and how the use of City-owned land will help meet these goals.

Item 6 Provide an estimated date of when you would like to, or have to, begin the Project and include any deadlines which must be met. **Please begin the Application process as early as possible to account for unanticipated delays and/or further informational requirements.**

Item7 Provide details on how long the Project is anticipated to last; activities may last from 1 day toongoing.

Item 8 This description should fully explain the details of the Project and will be used in the review process of the application. The more details that are provided, the better DEP can anticipate Project review requirements and thus, speed the review process.

Item 9 The location map should provide adequate information for someone not familiar with the area to find the site. It should show names of roads and highways, landmarks, and other relevant information. The scale should be smaller than a site plan/map

Item 10 If applicable, list the physical address (e.g. 127 Smith Rd.) of where the Project is to take place, otherwise, provide detailed road information on the location (e.g. 1 mile south of the intersection of Smith and Dale Roads, on the right-hand side between utility pole #12 and #13).

Item 11a and b List ALL the municipalities in which the Project will take place.

Item 12a and b Town tax map information can be obtained from your local tax assessor. (a) Provide the Tax map number of City land you are proposing to use. (b) Provide the tax map number of the parcel to be serviced (if any). Examples may be a driveway or other type of access over City property to private land.

Item 13 The access location is a specific description of where the site is accessed from a public road *(e.g., off County Route 100 between pole #14 and #15)*.

Item 14 Please indicate the DEP property Identification Number (PID). These are the City-owned land identification numbers used for administrative tracking purposes and can be supplied by the Project Manager.

Item 15 Estimate the total area of City-owned land required for the Project, this may be acres, square feet, linear feet, etc.

Item 16 Attach four (4) copies of any site plans/maps completed for the Project including preliminary sketches. To complete application processing, engineering and construction drawings and a survey may be required. Please indicate whether a survey of City-owned land boundary lines may be necessary for the Project.

Item 17 Indicate all approvals, including but not limited to permits and variances that will, or may be required, and the status of each. Copies must be provided to DEP before the issuance of the Land Use Permit.

Item 18 Describe what types of improvements on City land will be needed to obtain access to the site, include dimensions, length, stream/wetland crossings, type of material to be used, and length of time access will be needed for.

Item 19 Please explain the nature and source of any materials to be brought onto the site including but not limited to, soil, gravel, fill, stone, plantings, and animals, and also please indicate whether any hazardous materials such as chemicals, oil, fuel storage, or pesticides are proposed to be brought onto City-owned land.

Item 20 Indicate whether there will be any additional impervious surfaces on City-owned land and approximately how much. Please consider all potential surfaces including pavement, roofs, and culverts.

Item 21 Explain all ongoing maintenance and/or possible repairs that may be likely to result from the proposed Project and how it will be addressed *(e.g., who will be responsible for ongoing maintenance activities, the methods, and schedule*.

Item 22 Provide the names of those who are or may be expected to visit the Project site and their affiliation (i.e. John Smith from ABC Surveying). Updates and/or additions can be submitted as changes occur.

If additional space is needed to complete any Item, please put the information on a separate sheet of paper titled 'Continuation of Item _x_' and attach to the application. Thank you.

The completed signed application, supporting documentation, and a **non-refundable application fee of $25.00** made out to "City of New York" may be submitted directly to to:

DEP Natural Resources Division

Attention: Land Use Permit Application

465 Columbus Ave.

Valhalla, NY 10595-1336

An original signed application is required for our files.

Standard Conditions

Should this application be approved for a Land Use Permit intended for use of City-owned land, the following Standard Conditions will apply. There may be additional Standard and Special Conditions that will be required after your application is reviewed and upon final approval. You will be sent these Conditions in an *Offer Letter* later in the application review process.

The issuance and acceptance of a Revocable Land Use Permit shall be subject to the Rules of the City of New York, 15 RCNY §17 and shall impose an annual fee in accordance with the Revocable Permit Fee Schedule.

The Permit or renewal thereof is non-transferable. Renewal of the Permit, if applicable, shall be contingent upon compliance with the Conditions stated in the offer letter.

The Permit shall have an initial term of up to five (5) years with renewal terms of five (5) years unless and until the Permit is terminated in writing. At the end of the five (5) years, if the Permittee wishes to continue the use, they must renew their Permit.

The Permittee and/or any contractor(s) it hires to perform work under this Land Use Permit must conform to U. S. Department of Labor, Occupational Safety and Health Administration (OSHA) Regulations and any and all Applicable Environmental and Health and Safety regulations. DEP reserve the right to stop work if it is determined that applicable Environmental and health and safety regulations are not being complied with.

The Permittee shall comply with all federal, state, City, county and local laws and regulations applicable to the proposed work. The Permittee must obtain and maintain all permits and/or approvals required by regulatory authorities having jurisdiction over the activities allowed by this Permit.

The City reserves the right at all times to free and uninterrupted access to any portion of the Permit area for itself, its guests, agents, contractors, subcontractors, or assigns, including the right to disturb the surface or subsurface thereof without the necessity of replacing or paying for the replacing of any surface, pavement, structures, or other improvements so disturbed.

The Permittee shall maintain the Permit area in a safe, neat and clean condition at all times. All trash, rubbish, and refuse deposited upon the Permit area shall be removed by and at the expense of the Permittee and disposed of off site in conformance with all applicable regulations.

The Permittee must take care not to damage City property and shall be responsible for the repair of any damage caused as a result of activities under this Permit. Such repairs must be done at the Permittee's sole expense in a timely manner and to the satisfaction of the DEP. The Permittee assumes the responsibility for restoring City property.

The granting of this Land Use Permit does not imply that Permits for similar purposes will be granted in the future.

This Land Use Permit does not confer any right, easement or interest in, to, over, under, or across City-owned land.

The Permittee shall contact the DEP at least thirty (30) days in advance in the event any repair and or maintenance requiring special equipment, excavation, contractors for activities not approved under this Permit. For emergency situations in which advance notice to the DEP is not possible, Permittee shall notify the DEP within forty-eight (48) hours of the repair and or maintenance event. Following repair or maintenance activities carried out under this Permit, the Permittee shall restore City land to a condition acceptable to the DEP.

Workers Compensation:
Pursuant to Section 57 of the New York State Workers' Compensation Law, the Permittee must submit proof/documentation that any contractor hired for performing work on City land maintains the required workers' compensation and disability benefits coverage. If the contractor is not required by law to maintain workers' compensation and disability coverage, proof/documentation indicating such must be submitted.

Liability Insurance
For the duration of this Permit, the Permittee shall furnish and maintain liability insurance specifically covering the activity and the area under Permit in the following amounts: All Individual and Not-for-Profit Organizations: *not less than* $500,000; All Commercial entities: *not less than* $2,000,000 per occurrence, $5,000,000 aggregate; All Utilities and Municipalities: *not less than* $2,000,000 per occurrence, $5,000,000 aggregate.

The two entities as they appear below (A-B) shall be listed as additional insureds and endorsed to cover liability assumed by the Permittee under the provisions of this Permit as set forth below:

A). City of New York, its officials and employees
c/o New York City Department of Environmental Protection
59-17 Junction Blvd, 19th Floor
Flushing, NY 11373
Attn: General Counsel

B). New York City Water Board
c/o New York City Department of Environmental Protection
59-17 Junction Blvd, 19th Floor
Flushing, NY 11373
Attn: General Counsel

This insurance policy shall protect the City, the Water Board, Permittee and its contractors and subcontractors performing work in connection with this Permit from claims for property damage and/or bodily injury which may arise from operations under this Permit, whether such operations are performed by the Permittee or anyone directly or indirectly employed by the Permittee.

The Permittee shall indemnify and hold the City, and the Water Board harmless from and defend against claims for any and all personal injury and property damage to persons or property arising from the use of City land or improvements thereon under this Permit. Insurance policies naming the City of New York, its officials and employees, and the New York City Water Board, as additional insureds must be provided.

In consideration of the forgoing application, I hereby agree to use City-owned land for the purpose herein described and to further comply with any Conditions as outlined on Page 4 "Standard Conditions." I also understand that there will be additional Standard and Special Conditions that may be required of me and that these will be outlined in an *Offer Letter* to be sent upon approval of my application. I also CERTIFY that the information provided by me on this form, and any maps, plans, etc. submitted with this application are true, accurate, and complete to the best of my knowledge.

_____ _____

Signature of Applicant **Date**

Michael Ciaravino, City Manager

Title

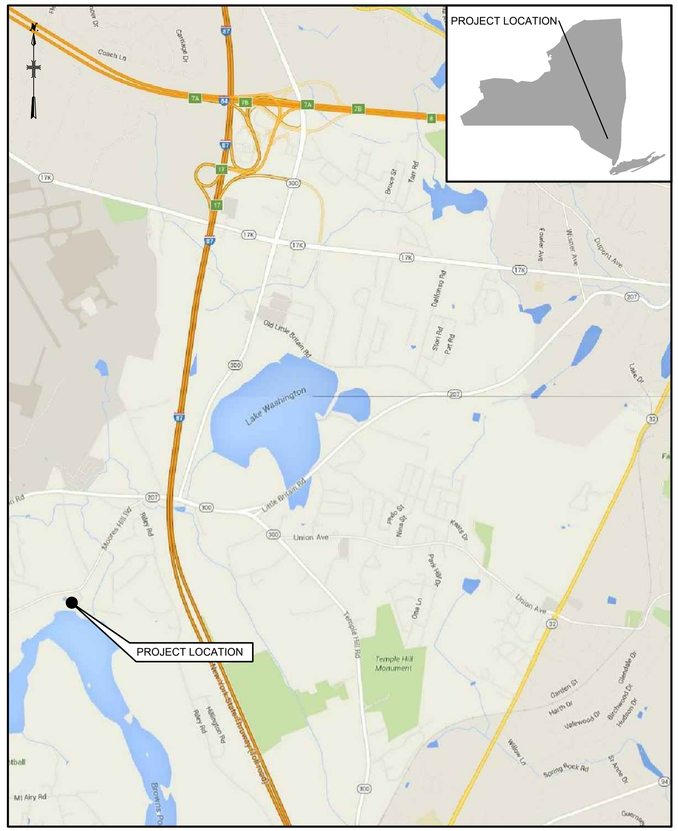

SOURCE: GOOGLE MAPS

PROJECT LOCATION MAP

0 1000' 2000' 4000'

NEW YORK STATE OF OPPORTUNITY. Department of Environmental Conservation

NEW YORK STATE DEPARTMENT OF ENVIRONMENTAL CONSERVATION
DIVISION OF ENVIRONMENTAL REMEDIATION

CITY OF NEWBURGH

CATSKILL TAP EXTENSION TO BROWN'S POND RAW WATER PUMP STATION

NEWBURGH, NEW YORK

SEPTEMBER 2017

INDEX TO DRAWINGS

SHEET NO.	TITLE
	COVER SHEET
G-01	GENERAL NOTES, ABBREVIATIONS, SYMBOLS AND LEGEND
C-01	SITE LAYOUT
C-02	PIPE PROFILES
M-01	CHECK VALVE VAULT AND AIR RELEASE MANHOLE PLANS AND SECTIONS
M-02	CONTROL VALVE VAULT PLAN AND SECTION
M-03	CONNECTION AT BROWN'S POND RAW WATER PUMP STATION PLAN AND SECTION
M-04	METER CHAMBER PLAN AND TYPICAL DETAILS
M-05	RESERVOIR OUTLET PLAN, SECTIONS AND DETAILS
I-01	SYMBOLS AND LEGEND
I-02	PROCESS & INSTRUMENTATION DIAGRAM
I-03	VFD WIRING DIAGRAM AND ADDITIONAL NOTES
E-01	SITE PLAN, NOTES AND DUCTBANK SECTIONS
E-02	PUMP STATION AND CONTROL VALVE VAULT POWER PLANS

CONSULTING ENGINEERS
ARCADIS CE, INC.
855 ROUTE 146
SUITE 210
CLIFTON PARK, NY 12065

RECORD DRAWINGS

THIS DRAWING REFLECTS CHANGES FROM THE ORIGINAL CONTRACT DRAWING THAT WERE MADE DURING CONSTRUCTION AND HAS BEEN PREPARED FROM INFORMATION PROVIDED TO THE ENGINEER BY THE CONSTRUCTION CONTRACTOR(S)/OWNERS. THE ENGINEER DOES NOT WARRANT THIS DRAWING TO BE COMPLETE AND ACCURATE IN ALL RESPECTS.

ARCADIS-US

Date SEPTEMBER 2017 By RPV

LEGAL ENTITY: ARCADIS CE, INC.

ARCADIS

STATE OF NEW YORK · DANIEL JOHN LOEWENSTEIN · Lic. No. 066594 · LICENSED PROFESSIONAL ENGINEER

APPROVED FOR
ARCADIS CE, INC. _____

WARNING – IT IS A VIOLATION OF NEW YORK EDUCATION LAW SECTION 7209.2, FOR ANY PERSON, UNLESS HE IS ACTING UNDER THE DIRECTION OF A LICENSED PROFESSIONAL ENGINEER OR LAND SURVEYOR, TO ALTER THIS DOCUMENT IN ANY WAY. IF ALTERED THE ALTERING PERSON SHALL COMPLY WITH THE REQUIREMENTS OF NEW YORK EDUCATION LAW, SECTION 7209.2.

USER: HAUSMANN, FILENAME: G:\ACAD\PROJ\X0266443.0000\CATSKILL TAP UPGRADE\RECORD DRAWINGS\X0266443-G00.DWG SAVE DATE: 10/3/2017 6:08 AM PLOT DATE: 10/3/2017 6:08 AM

GENERAL NOTES:

1. FINAL TOPOGRAPHY SHOWN ON DRAWINGS IS BASED ON GPS SURVEY PERFORMED BY SCHULTZ CONSTRUCTION, DATED AUGUST 17, 2017.
2. ELEVATIONS SHOWN ON THE DRAWINGS ARE IN FEET AND REFERENCE THE NORTH AMERICAN VERTICAL DATUM OF 1988 (NAVD 88).
3. PROJECT NORTH ORIENTATION IS BASED ON GPS OBSERVATIONS BY THE CHAZEN COMPANIES TAKEN AT THE TIME OF THE FIELD SURVEY.
4. SCALES SHOWN HEREIN ARE FOR FULL SIZE PLOTS ON 22x34 INCH SHEETS.
5. SYMBOLS AND ABBREVIATIONS SHOWN ON THIS SHEET ARE STANDARD AND MAY NOT BE UTILIZED WITHIN THESE CONTRACT DRAWINGS FOR THE WORK DEPICTED.

ABBREVIATIONS

SITE WORK

ASPH	–	ASPHALT
BIT.	–	BITUMINOUS
BL	–	BASELINE
CB	–	CATCH BASIN
℄	–	CENTER LINE
CL	–	CHAIN LINK
CONC.	–	CONCRETE
Deg	–	DEGREES
DIA	–	DIAMETER
DR	–	DRAIN LINE
E	–	ELECTRIC
EL.	–	ELEVATION
EMH	–	ELECTRICAL MANHOLE
EP	–	EDGE OF PAVEMENT
FIN. FLR	–	FINISHED FLOOR
FLR	–	FLOOR
G	–	GAS
HH	–	HANDHOLE
HP	–	HIGH POINT
HYD.	–	HYDRANT
I.D.	–	INSIDE DIAMETER
INV	–	INVERT
KVE	–	ELECTRIC CABLE
LP	–	LOW POINT
MH	–	MANHOLE
NTS	–	NOT TO SCALE
O.C.	–	ON CENTER
O.D.	–	OUTSIDE DIAMETER
PRESS.	–	PRESSURE
ℙ	–	PROPERTY LINE
PVMT	–	PAVEMENT
R	–	RADIUS
S	–	STORM DRAIN
ST	–	STORM
STA.	–	STATION
SW	–	SIDEWALK
TEMP.	–	TEMPORARY
TOS	–	TOP OF SLAB
TYP.	–	TYPICAL
W	–	WATER
WS	–	WATER STOP
WSE	–	WATER SURFACE ELEVATION

PIPE AND FITTINGS

BF	–	BLIND FLANGE
BW	–	BUTT WELDED
BZ	–	BRAZED
C	–	COMPRESSION/ COPPER
CI	–	CAST IRON
DIP	–	DUCTILE IRON PIPE
ELL	–	ELBOW
FLG	–	FLANGED
LR	–	LONG RADIUS
MJ	–	MECHANICAL JOINT
PE	–	PLAIN END
PVC	–	POLYVINYL CHLORIDE
SS	–	STAINLESS STEEL

VALVES

BV	–	BALL VALVE
CV	–	CHECK VALVE
GV	–	GATE VALVE
NC	–	NORMALLY CLOSED
FCV	–	FLOW CONTROL VALVE

PROCESS PIPING

W	–	WATER
DR	–	DRAIN
ST	–	STORM SEWER

SHEET IDENTIFICATION

G	–	GENERAL
C	–	CIVIL
S	–	STRUCTURAL
M	–	MECHANICAL
I	–	INSTRUMENTATION & CONTROL
E	–	ELECTRICAL

LEGEND

	BOLLARD
PST	POST
IRF	IRON ROD FOUND
	WATER MANHOLE
	GUY WIRE
	UTILITY POLE
	HYDRANT
	VALVE
	STORM MANHOLE
	UTILITY MANHOLE
GP	GATE POST
	STREET LIGHT
	SIGN
C	CATCH BASIN
	PROPERTY CORNER MARKER
	TREE
×280.63	SPOT ELEVATION
276	TOPOGRAPHIC CONTOUR
	TREE LINE
OHW	OVERHEAD WIRES
G	UNDERGROUND GAS LINE
UT	UNDERGROUND TELECOMMUNICATIONS
UE	UNDERGROUND ELECTRIC
ST	STORM SEWER
W	WATER LINE
X	FENCE
	PROPERTY LINE
	MUNICIPAL BOUNDARY

PIPING SYMBOLS

	EXISTING FACILITIES PRIOR TO THE CATSKILL TAP EXTENSION
	WORK INCLUDED UNDER THIS PROJECT
	GATE VALVE
	FLOW CONTROL
	CHECK VALVE
	BALL VALVE
	BUTTERFLY VALVE
	FLANGED JOINT (FLG)
	MECHANICAL JOINT (MJ)
	FLOW ARROW
	FLEXIBLE COUPLING
	HARNESSED FLEXIBLE COUPLING
	FLANGE ADAPTER
	HARNESSED FLANGE ADAPTER

SECTION NUMBER — X
SHEET ON WHICH SECTION IS SHOWN — X–XX

DETAIL NUMBER — X
SHEET ON WHICH DETAIL IS SHOWN — X–X

SECTION AND DETAIL KEY

WARNING – IT IS A VIOLATION OF NEW YORK EDUCATION LAW SECTION 7209.2, FOR ANY PERSON, UNLESS HE IS ACTING UNDER THE DIRECTION OF A LICENSED PROFESSIONAL ENGINEER OR LAND SURVEYOR, TO ALTER THIS DOCUMENT IN ANY WAY. IF ALTERED THE ALTERING PERSON SHALL COMPLY WITH THE REQUIREMENTS OF NEW YORK EDUCATION LAW, SECTION 7209.2.

ARCADIS
LEGAL ENTITY:
ARCADIS CE, INC.
CONSULTANTS

RECORD DRAWINGS

THIS DRAWING REFLECTS CHANGES FROM THE ORIGINAL CONTRACT DRAWING THAT WERE MADE DURING CONSTRUCTION AND HAS BEEN PREPARED FROM INFORMATION PROVIDED TO THE ENGINEER BY THE CONSTRUCTION CONTRACTOR(S)/OWNERS. THE ENGINEER DOES NOT WARRANT THIS DRAWING TO BE COMPLETE AND ACCURATE IN ALL RESPECTS.

ARCADIS-US
Date SEPTEMBER 2017 By RPV

SEALS

STATE OF NEW YORK · DANIEL JOHN LOEWENSTEIN · 2017 · LICENSED PROFESSIONAL ENGINEER · NO. 066594

NEW YORK STATE OF OPPORTUNITY. Department of Environmental Conservation

CITY OF NEWBURGH

CATSKILL TAP EXTENSION TO BROWN'S POND RAW WATER PUMP STATION

NO.	DATE	ISSUED FOR	BY
1	SEPT 2017	RECORD DRAWINGS	RPV

COPYRIGHT: ARCADIS CE, INC. 2016

DATE:	SEPTEMBER 2017
PROJECT NO.:	00266443.0000
FILE NAME:	0266443–G01
DESIGNED BY:	A. CHAI
DRAWN BY:	Z. SANGALANG
CHECKED BY:	R. OSTAPCZUK

SHEET TITLE

GENERAL

GENERAL NOTES, ABBREVIATIONS, SYMBOLS AND LEGEND

SCALE: AS SHOWN

G–01

SHEET 1 OF 13

User:HAUSMANN Spec:AUS-NCSMOD File:G:\ACAD\PROJ\00266443.0000\CATSKILL TAP UPGRADE\RECORD DRAWINGS\0266443-G01.DWG Scale:1:1 SavedDate:9/28/2017 Time:08:49 Plot Date: Hausmann, Steve; 10/3/2017; 06:06 ; Layout:G-01

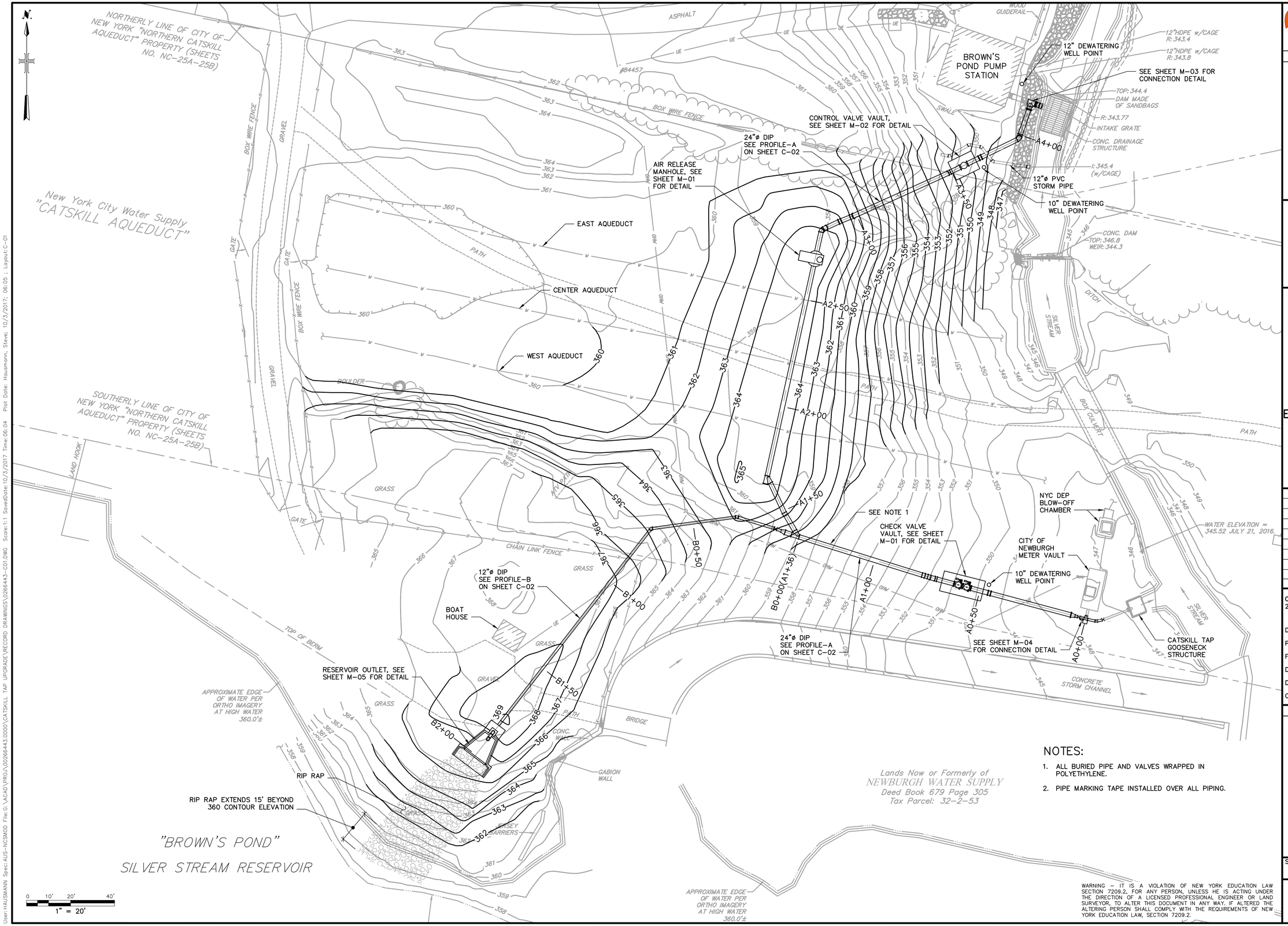

NOTES:

1. ALL BURIED PIPE AND VALVES WRAPPED IN POLYETHYLENE.
2. PIPE MARKING TAPE INSTALLED OVER ALL PIPING.

WARNING – IT IS A VIOLATION OF NEW YORK EDUCATION LAW SECTION 7209.2, FOR ANY PERSON, UNLESS HE IS ACTING UNDER THE DIRECTION OF A LICENSED PROFESSIONAL ENGINEER OR LAND SURVEYOR, TO ALTER THIS DOCUMENT IN ANY WAY. IF ALTERED THE ALTERING PERSON SHALL COMPLY WITH THE REQUIREMENTS OF NEW YORK EDUCATION LAW, SECTION 7209.2.

ARCADIS

LEGAL ENTITY:
ARCADIS CE, INC.

CONSULTANTS

RECORD DRAWINGS

THIS DRAWING REFLECTS CHANGES FROM THE ORIGINAL CONTRACT DRAWING THAT WERE MADE DURING CONSTRUCTION AND HAS BEEN PREPARED FROM INFORMATION PROVIDED TO THE ENGINEER BY THE CONSTRUCTION CONTRACTOR(S)/OWNERS. THE ENGINEER DOES NOT WARRANT THIS DRAWING TO BE COMPLETE AND ACCURATE IN ALL RESPECTS.

ARCADIS-US
Date SEPTEMBER 2017 By RPV

SEALS

STATE OF NEW YORK · DANIEL JOHN LOEWENSTEIN · No. 066594 · LICENSED PROFESSIONAL ENGINEER

NEW YORK STATE OF OPPORTUNITY. Department of Environmental Conservation

CITY OF NEWBURGH

CATSKILL TAP EXTENSION TO BROWN'S POND RAW WATER PUMP STATION

NO.	DATE	ISSUED FOR	BY
1	SEPT 2017	RECORD DRAWINGS	RPV

COPYRIGHT: ARCADIS CE, INC. 2016

DATE:	SEPTEMBER 2017
PROJECT NO.:	00266443.0000
FILE NAME:	0266443-C01
DESIGNED BY:	A. CHAI
DRAWN BY:	Z. SANGALANG
CHECKED BY:	D. PAPASTAHIS

SHEET TITLE

CIVIL

SITE LAYOUT

SCALE: 1" = 20'

C-01

SHEET 2 OF 13

User:HAUSMANN Spec:AUS-NCSMOD File:G:\ACAD\PROJ\00266443.0000\CATSKILL TAP UPGRADE\RECORD DRAWINGS\0266443-C01.DWG Scale:1:1 SavedDate:10/3/2017 Time:06:04 Plot Date: Hausmann, Steve; 10/3/2017; 06:05 ; Layout:C-01

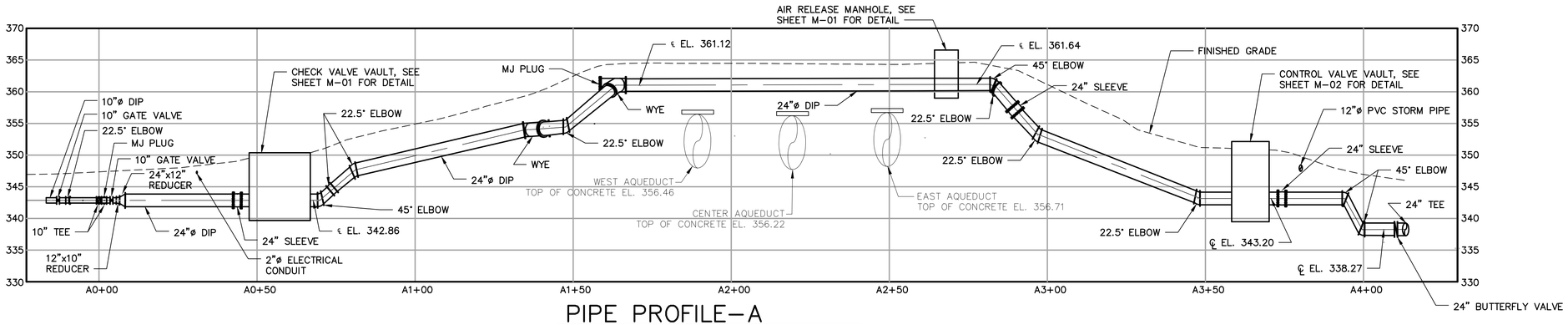

PIPE PROFILE–A

0 20' 40' 0 10' 20'

HORIZONTAL SCALE: 1"=20' VERTICAL SCALE: 1"=10'

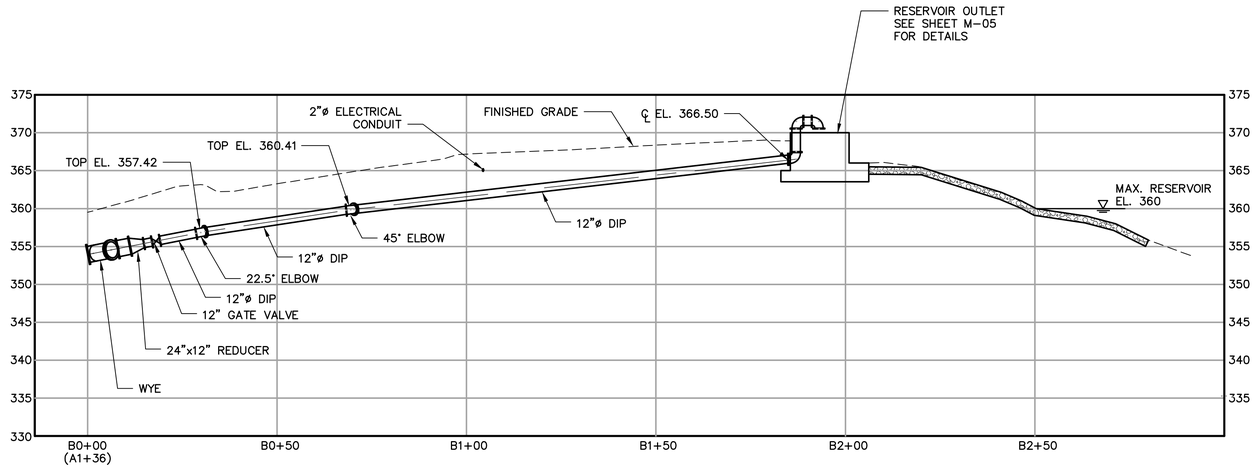

PIPE PROFILE–B

0 20' 40' 0 10' 20'

HORIZONTAL SCALE: 1"=20' VERTICAL SCALE: 1"=10'

ARCADIS

LEGAL ENTITY:
ARCADIS CE, INC.

CONSULTANTS

RECORD DRAWINGS

THIS DRAWING REFLECTS CHANGES FROM THE ORIGINAL CONTRACT DRAWING THAT WERE MADE DURING CONSTRUCTION AND HAS BEEN PREPARED FROM INFORMATION PROVIDED TO THE ENGINEER BY THE CONSTRUCTION CONTRACTOR(S)/OWNERS. THE ENGINEER DOES NOT WARRANT THIS DRAWING TO BE COMPLETE AND ACCURATE IN ALL RESPECTS.

ARCADIS-US

Date SEPTEMBER 2017 By RPV

SEALS

STATE OF NEW YORK · DANIEL JOHN LOEWENSTEIN · LICENSED PROFESSIONAL ENGINEER · No. 086594

NEW YORK STATE OF OPPORTUNITY. Department of Environmental Conservation

CITY OF NEWBURGH

CATSKILL TAP EXTENSION TO BROWN'S POND RAW WATER PUMP STATION

NO.	DATE	ISSUED FOR	BY
1	SEPT 2017	RECORD DRAWINGS	RPV

COPYRIGHT: ARCADIS CE, INC. 2016

DATE: SEPTEMBER 2017
PROJECT NO.: 00266443.0000
FILE NAME: 0266443–C02
DESIGNED BY: A. CHAI
DRAWN BY: Z. SANGALANG
CHECKED BY: D. PAPASTATHIS

SHEET TITLE

CIVIL

PIPE PROFILES

SCALE: AS SHOWN

C–02

SHEET 3 OF 13

WARNING – IT IS A VIOLATION OF NEW YORK EDUCATION LAW SECTION 7209.2, FOR ANY PERSON, UNLESS HE IS ACTING UNDER THE DIRECTION OF A LICENSED PROFESSIONAL ENGINEER OR LAND SURVEYOR, TO ALTER THIS DOCUMENT IN ANY WAY. IF ALTERED THE ALTERING PERSON SHALL COMPLY WITH THE REQUIREMENTS OF NEW YORK EDUCATION LAW, SECTION 7209.2.

User:HAUSMANN Spec:AUS-NCSMOD File:G:\ACAD\PROJ\00266443.0000\CATSKILL TAP UPGRADE\RECORD DRAWINGS\0266443-C02.DWG Scale:1:1 SavedDate:9/28/2017 Time:09:55 Plot Date: Hausmann, Steve; 10/3/2017; 06:05 ; Layout:C-02

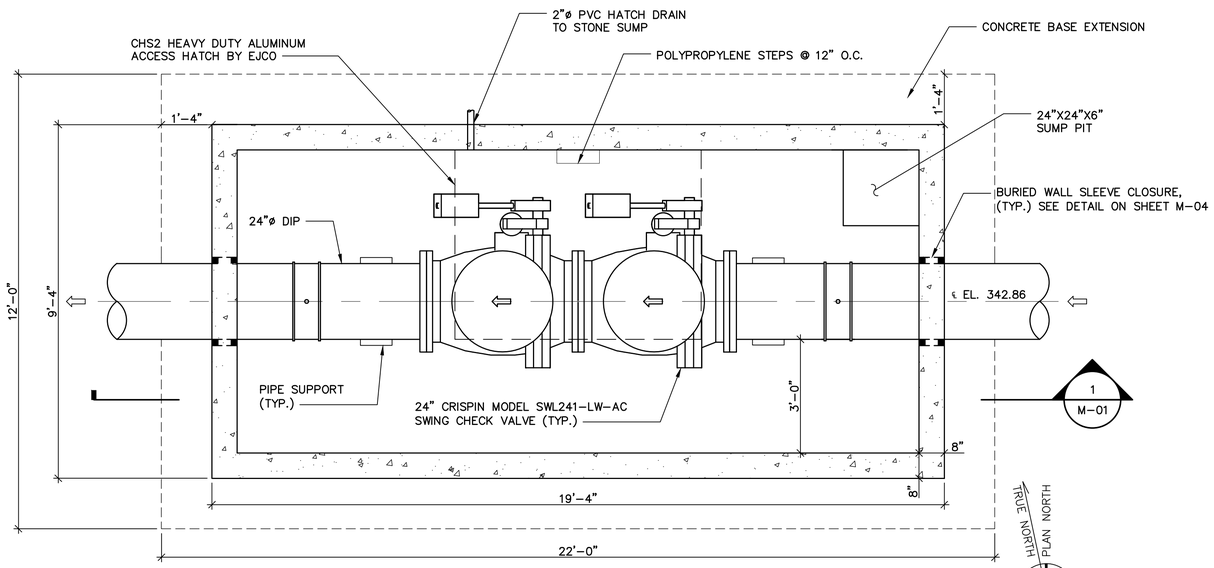

CHECK VALVE VAULT

SCALE: 1/2" = 1'-0"

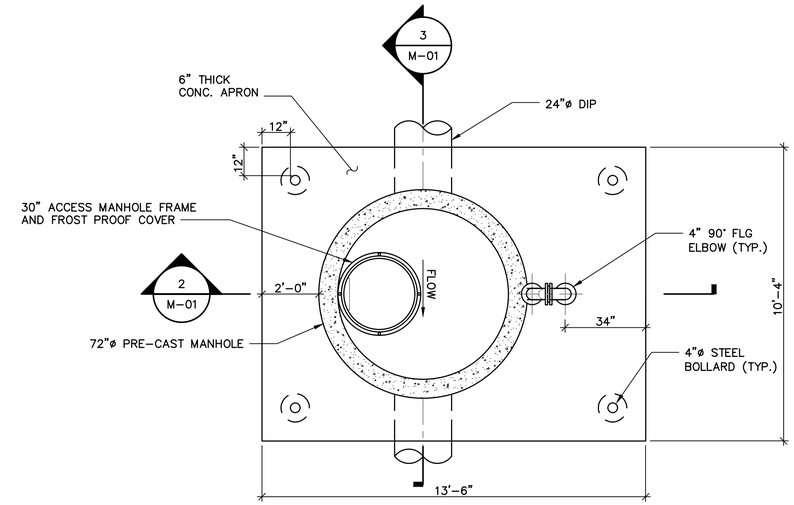

AIR RELEASE MANHOLE

SCALE: 3/8" = 1'-0"

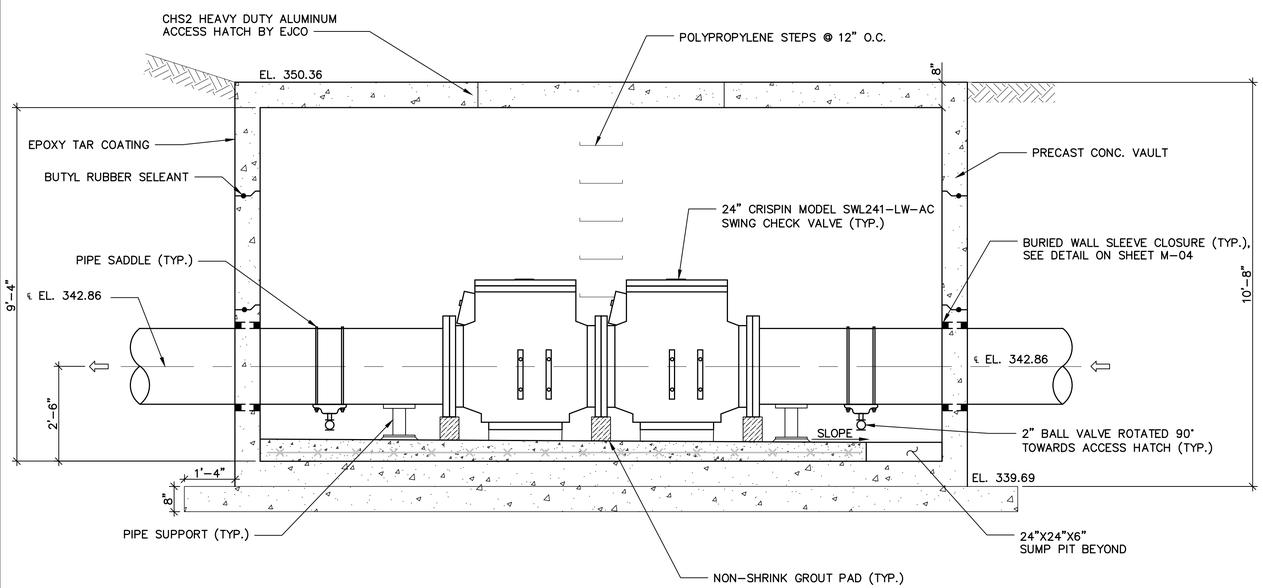

1 M-01 SECTION

1/2" = 1'-0"

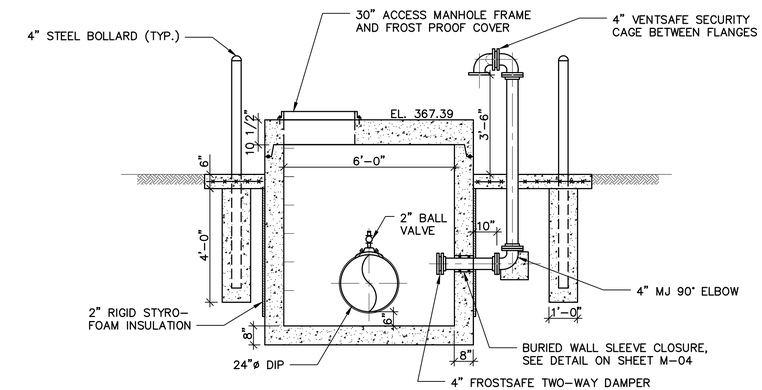

2 M-01 SECTION

3/8" = 1'-0"

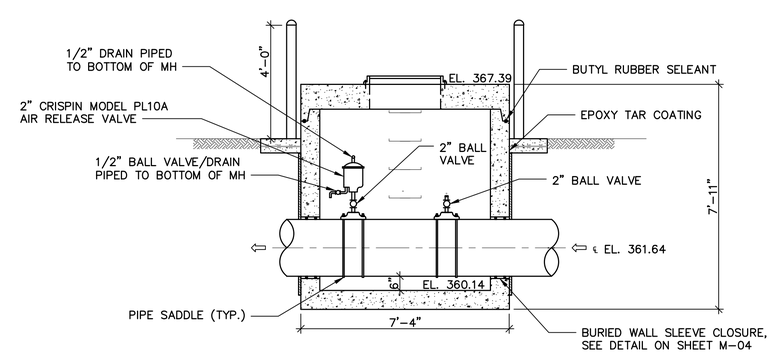

3 M-01 SECTION

3/8" = 1'-0"

WARNING – IT IS A VIOLATION OF NEW YORK EDUCATION LAW SECTION 7209.2, FOR ANY PERSON, UNLESS HE IS ACTING UNDER THE DIRECTION OF A LICENSED PROFESSIONAL ENGINEER OR LAND SURVEYOR, TO ALTER THIS DOCUMENT IN ANY WAY. IF ALTERED THE ALTERING PERSON SHALL COMPLY WITH THE REQUIREMENTS OF NEW YORK EDUCATION LAW, SECTION 7209.2.

ARCADIS

LEGAL ENTITY:
ARCADIS CE, INC.

CONSULTANTS

RECORD DRAWINGS

THIS DRAWING REFLECTS CHANGES FROM THE ORIGINAL CONTRACT DRAWING THAT WERE MADE DURING CONSTRUCTION AND HAS BEEN PREPARED FROM INFORMATION PROVIDED TO THE ENGINEER BY THE CONSTRUCTION CONTRACTOR(S)/OWNERS. THE ENGINEER DOES NOT WARRANT THIS DRAWING TO BE COMPLETE AND ACCURATE IN ALL RESPECTS.

ARCADIS-US
Date SEPTEMBER 2017 By RPV

SEALS

STATE OF NEW YORK · DANIEL JOHN LOEWENSTEIN · No. 066594 · LICENSED PROFESSIONAL ENGINEER

NEW YORK STATE OF OPPORTUNITY. Department of Environmental Conservation

CITY OF NEWBURGH

CATSKILL TAP EXTENSION TO BROWN'S POND RAW WATER PUMP STATION

NO.	DATE	ISSUED FOR	BY
1	SEPT 2017	RECORD DRAWINGS	RPV

COPYRIGHT: ARCADIS CE, INC. 2016

DATE: SEPTEMBER 2017
PROJECT NO.: 00266443.0000
FILE NAME: 0266443-M01
DESIGNED BY: A. CHAI
DRAWN BY: Z. SANGALANG
CHECKED BY: J. MAHON

SHEET TITLE

MECHANICAL

CHECK VALVE VAULT AND AIR RELEASE MANHOLE PLANS AND SECTIONS

SCALE: AS SHOWN

M-01

SHEET 4 OF 13

User:HAUSMANN Spec:AUS-NCSMOD File:G:\ACAD\PROJ\00266443.0000\CATSKILL TAP UPGRADE\RECORD DRAWINGS\0266443-M01.DWG Scale:1:1 SavedDate:9/28/2017 Time:09:56 Plot Date: Hausmann, Steve; 10/3/2017; 06:06 ; Layout:M-01

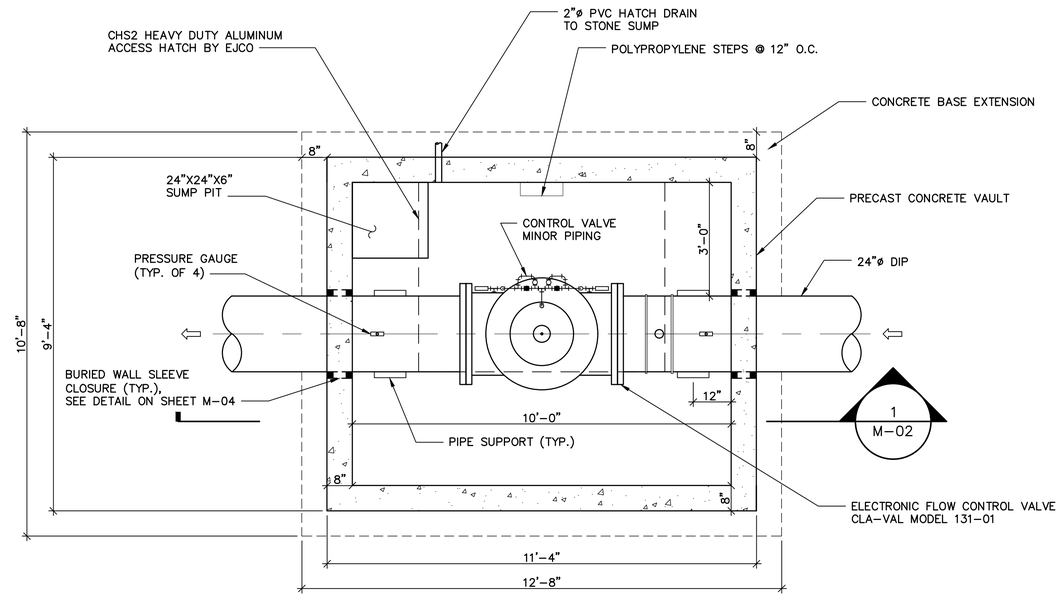

CONTROL VALVE VAULT

SCALE: 1/2" = 1'-0"

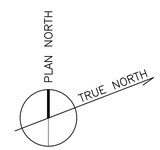

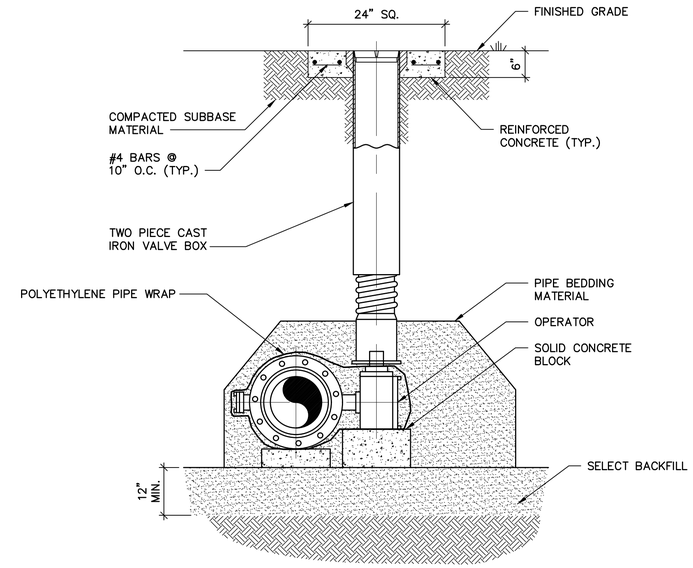

BURIED BUTTERFLY VALVE DETAIL

NOT TO SCALE

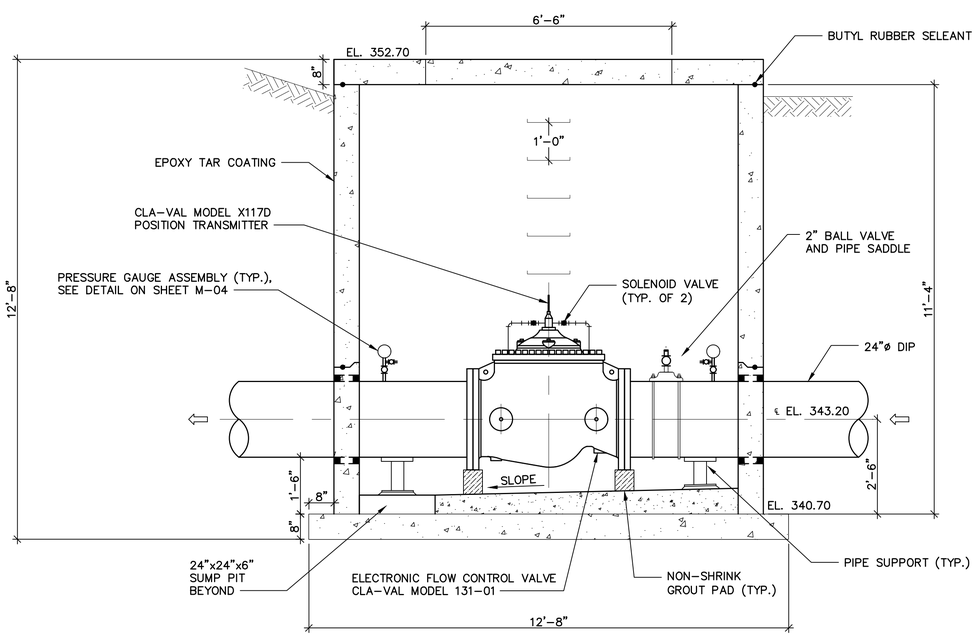

1 M-02 SECTION

1/2" = 1'-0"

WARNING – IT IS A VIOLATION OF NEW YORK EDUCATION LAW SECTION 7209.2, FOR ANY PERSON, UNLESS HE IS ACTING UNDER THE DIRECTION OF A LICENSED PROFESSIONAL ENGINEER OR LAND SURVEYOR, TO ALTER THIS DOCUMENT IN ANY WAY. IF ALTERED THE ALTERING PERSON SHALL COMPLY WITH THE REQUIREMENTS OF NEW YORK EDUCATION LAW, SECTION 7209.2.

ARCADIS

LEGAL ENTITY:
ARCADIS CE, INC.

CONSULTANTS

RECORD DRAWINGS

THIS DRAWING REFLECTS CHANGES FROM THE ORIGINAL CONTRACT DRAWING THAT WERE MADE DURING CONSTRUCTION AND HAS BEEN PREPARED FROM INFORMATION PROVIDED TO THE ENGINEER BY THE CONSTRUCTION CONTRACTOR(S)/OWNERS. THE ENGINEER DOES NOT WARRANT THIS DRAWING TO BE COMPLETE AND ACCURATE IN ALL RESPECTS.

ARCADIS-US

Date SEPTEMBER 2017 By RPV

SEALS

STATE OF NEW YORK · DANIEL JOHN LOEWENSTEIN · No. 066594 · LICENSED PROFESSIONAL ENGINEER

NEW YORK STATE OF OPPORTUNITY. Department of Environmental Conservation

CITY OF NEWBURGH

CATSKILL TAP EXTENSION TO BROWN'S POND RAW WATER PUMP STATION

NO.	DATE	ISSUED FOR	BY
1	SEPT 2017	RECORD DRAWINGS	RPV

COPYRIGHT: ARCADIS CE, INC. 2016

DATE: SEPTEMBER 2017
PROJECT NO.: 00266443.0000
FILE NAME: 0266443-M02
DESIGNED BY: A. CHAI
DRAWN BY: Z. SANGALANG
CHECKED BY: J. MAHON

SHEET TITLE

MECHANICAL

CONTROL VALVE VAULT PLAN AND SECTION

SCALE: AS SHOWN

M-02

SHEET 5 OF 13

User:HAUSMANN Spec:AUS-NCSMOD File:G:\ACAD\PROJ\00266443.0000\CATSKILL TAP UPGRADE\RECORD DRAWINGS\0266443-M02.DWG Scale:1:1 SavedDate:9/28/2017 Time:10:01 Plot Date: Hausmann, Steve; 10/3/2017; 06:06 ; Layout:M-02

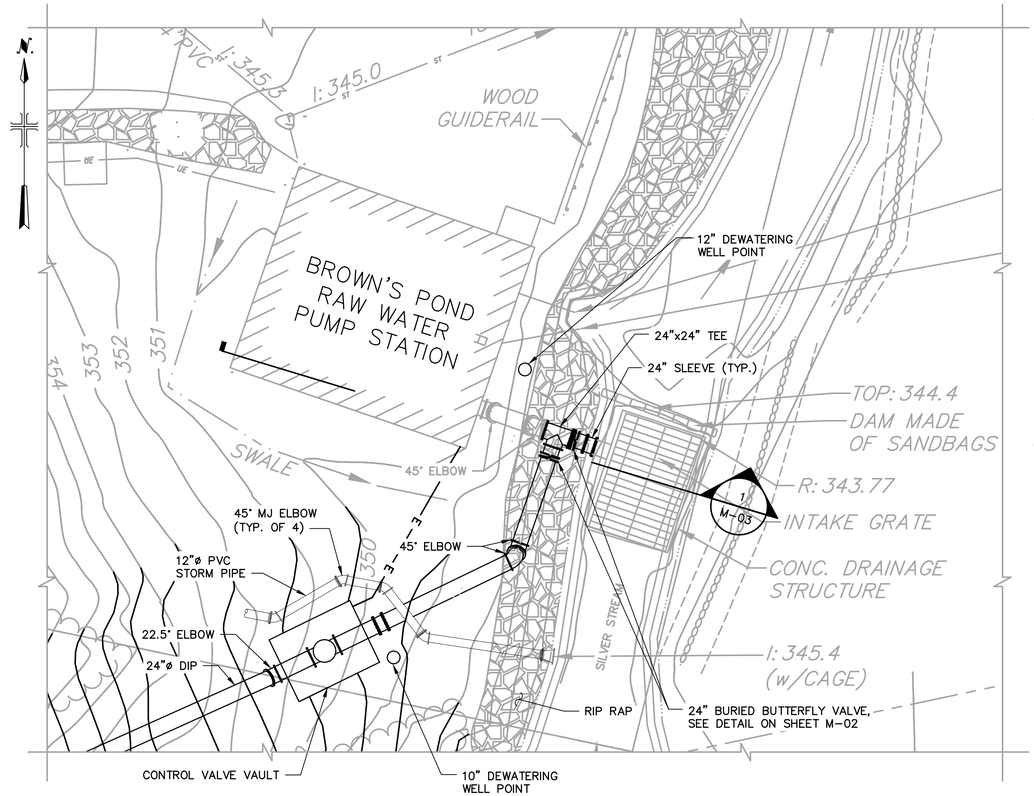

PUMP STATION CONNECTION – PLAN VIEW

SCALE: 1" = 10'-0"

0 5' 10' 20'

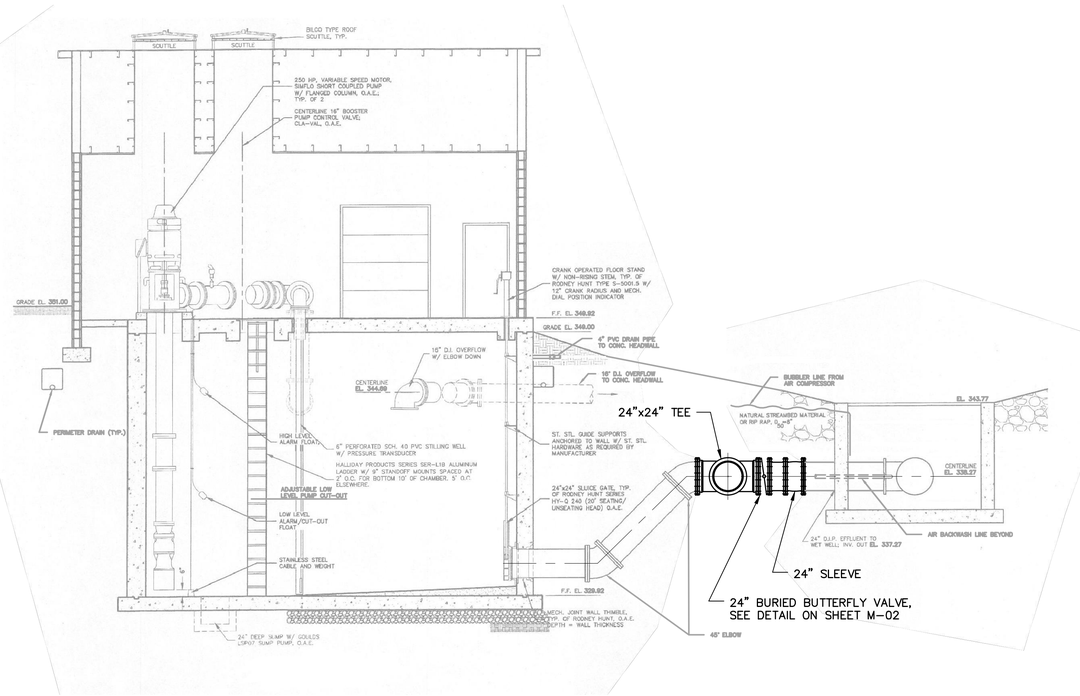

1
M-03

PUMP STATION CONNECTION – SECTION VIEW

SCALE: 3/16" = 1'-0"

0 4' 8' 12'

WARNING – IT IS A VIOLATION OF NEW YORK EDUCATION LAW SECTION 7209.2, FOR ANY PERSON, UNLESS HE IS ACTING UNDER THE DIRECTION OF A LICENSED PROFESSIONAL ENGINEER OR LAND SURVEYOR, TO ALTER THIS DOCUMENT IN ANY WAY. IF ALTERED THE ALTERING PERSON SHALL COMPLY WITH THE REQUIREMENTS OF NEW YORK EDUCATION LAW, SECTION 7209.2.

ARCADIS

LEGAL ENTITY:
ARCADIS CE, INC.

CONSULTANTS

RECORD DRAWINGS

THIS DRAWING REFLECTS CHANGES FROM THE ORIGINAL CONTRACT DRAWING THAT WERE MADE DURING CONSTRUCTION AND HAS BEEN PREPARED FROM INFORMATION PROVIDED TO THE ENGINEER BY THE CONSTRUCTION CONTRACTOR(S)/OWNERS. THE ENGINEER DOES NOT WARRANT THIS DRAWING TO BE COMPLETE AND ACCURATE IN ALL RESPECTS.

ARCADIS-US

Date SEPTEMBER 2017 By RPV

SEALS

STATE OF NEW YORK · DANIEL JOHN LOEWENSTEIN · No. 066594 · LICENSED PROFESSIONAL ENGINEER

NEW YORK STATE OF OPPORTUNITY. Department of Environmental Conservation

CITY OF NEWBURGH

CATSKILL TAP EXTENSION TO BROWN'S POND RAW WATER PUMP STATION

NO.	DATE	ISSUED FOR	BY
1	SEPT 2017	RECORD DRAWINGS	RPV

COPYRIGHT: ARCADIS CE, INC. 2016

DATE: SEPTEMBER 2017
PROJECT NO.: 00266443.0000
FILE NAME: 0266443–M03
DESIGNED BY: A. CHAI
DRAWN BY: Z. SANGALANG
CHECKED BY: J. MAHON

SHEET TITLE

MECHANICAL

CONNECTION AT BROWN'S POND RAW WATER PUMP STATION PLAN AND SECTION

SCALE: AS SHOWN

M–03

SHEET 6 OF 13

User:HAUSMANN Spec:AUS-NCSMOD File:G:\ACAD\PROJ\00266443.0000\CATSKILL TAP UPGRADE\RECORD DRAWINGS\0266443-M03.DWG Scale:1:1 SavedDate:9/28/2017 Time:10:03 Plot Date: Hausmann, Steve; 10/3/2017; 06:07 ; Layout:M-03

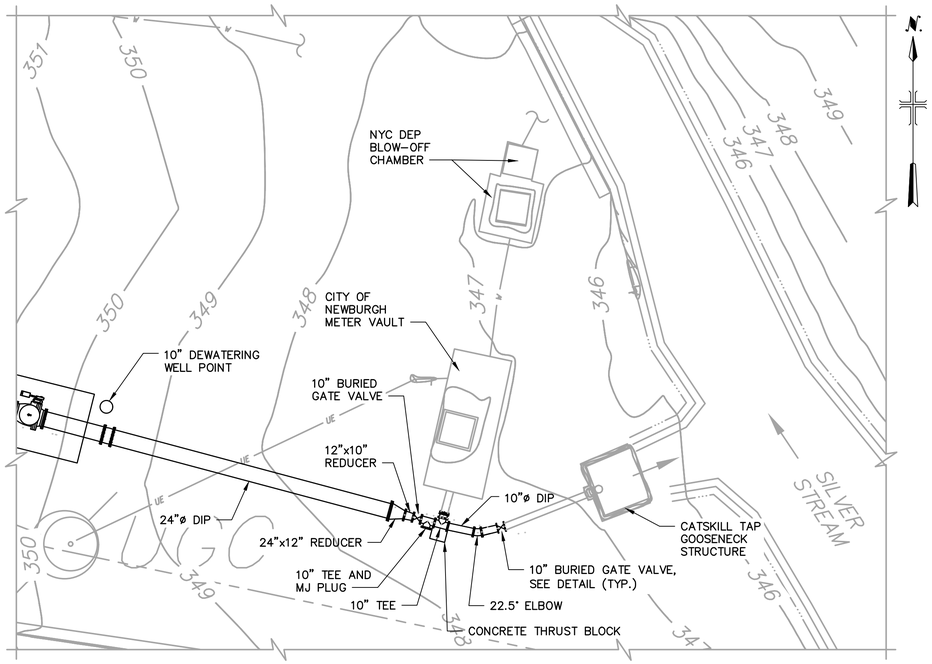

METER CHAMBER SITE PLAN

SCALE: 1" = 10'

0 10' 20'

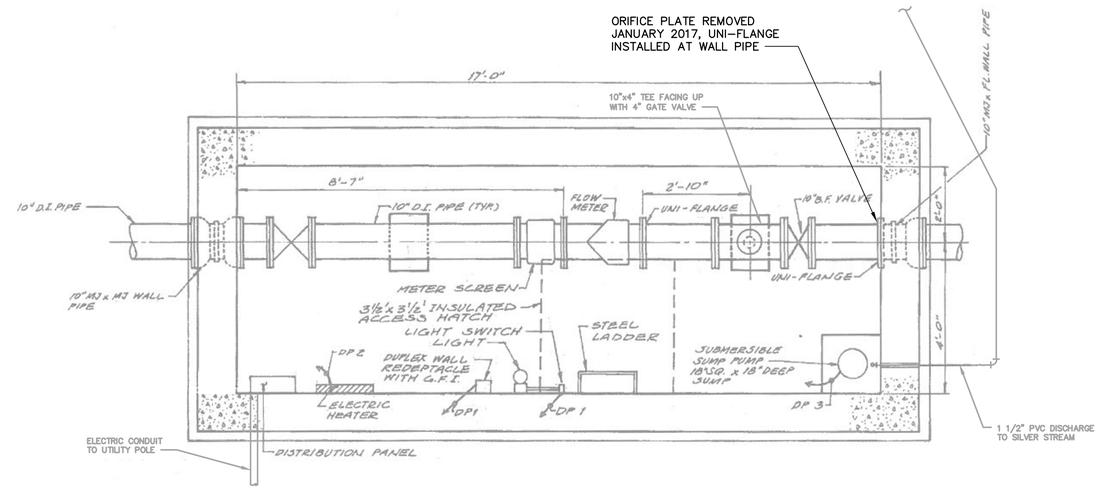

METER CHAMBER–PLAN VIEW

SCALE: 1/2" = 1'–0"

0 1' 2' 4'

REINFORCING LAP SPLICE & EMBEDMENT LENGTH							
BAR SIZE	MIN LAP LENGTH (IN)				MIN EMBEDMENT LENGTH (IN)		
	TOP BARS		OTHER BARS		STRAIGHT BARS		WITH STD HOOK
	CLASS		CLASS		TOP BARS	OTHER BARS	
	A	B	A	B			
SLABS & WALLS WITH 2" + COVER							
#3	16	21	12	16	16	12	6
#4	16	21	12	16	16	12	7
#5	20	25	15	19	20	15	9
#6	24	30	18	23	24	18	10
#7	33	43	25	33	33	25	12
#8	38	49	29	37	38	29	14
#9	49	63	37	48	49	37	15
#10	60	78	46	60	60	46	17
#11	75	97	57	74	75	57	19

NOTES:
1. THE MINIMUM LENGTH OF LAPS FOR ALL SPLICES IS AS GIVEN IN THE TABLE FOR CLASS "B" LAPS UNLESS OTHERWISE SHOWN AS CLASS "A"

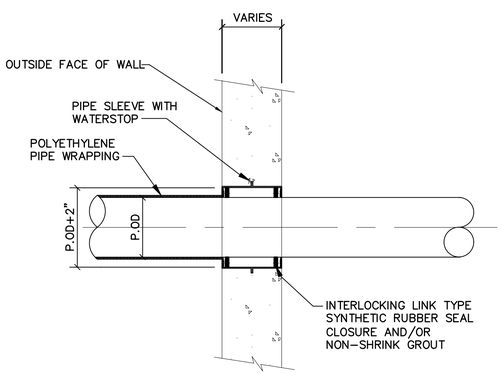

BURIED WALL SLEEVE CLOSURE

NOT TO SCALE

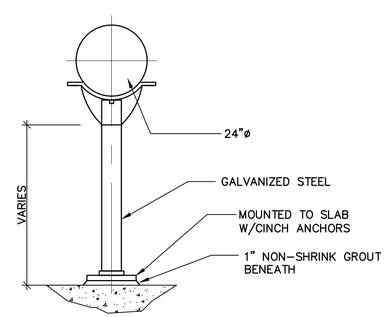

PIPE SADDLE SUPPORT DETAIL

NOT TO SCALE

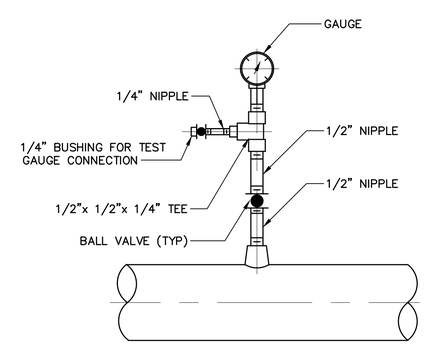

PRESSURE GAUGE MOUNTING DETAIL

NOT TO SCALE

WARNING – IT IS A VIOLATION OF NEW YORK EDUCATION LAW SECTION 7209.2, FOR ANY PERSON, UNLESS HE IS ACTING UNDER THE DIRECTION OF A LICENSED PROFESSIONAL ENGINEER OR LAND SURVEYOR, TO ALTER THIS DOCUMENT IN ANY WAY. IF ALTERED THE ALTERING PERSON SHALL COMPLY WITH THE REQUIREMENTS OF NEW YORK EDUCATION LAW, SECTION 7209.2.

ARCADIS

LEGAL ENTITY:
ARCADIS CE, INC.

CONSULTANTS

RECORD DRAWINGS

THIS DRAWING REFLECTS CHANGES FROM THE ORIGINAL CONTRACT DRAWING THAT WERE MADE DURING CONSTRUCTION AND HAS BEEN PREPARED FROM INFORMATION PROVIDED TO THE ENGINEER BY THE CONSTRUCTION CONTRACTOR(S)/OWNERS. THE ENGINEER DOES NOT WARRANT THIS DRAWING TO BE COMPLETE AND ACCURATE IN ALL RESPECTS.

ARCADIS-US

Date SEPTEMBER 2017 By RPV

SEALS

STATE OF NEW YORK · DANIEL JOHN LOEWENSTEIN · No. 066594 · LICENSED PROFESSIONAL ENGINEER

NEW YORK STATE OF OPPORTUNITY. Department of Environmental Conservation

CITY OF NEWBURGH

CATSKILL TAP EXTENSION TO BROWN'S POND RAW WATER PUMP STATION

NO.	DATE	ISSUED FOR	BY
1	SEPT 2017	RECORD DRAWINGS	RPV

COPYRIGHT: ARCADIS CE, INC. 2016

DATE: SEPTEMBER 2017
PROJECT NO.: 00266443.0000
FILE NAME: 0266443–M04
DESIGNED BY: A. CHAI
DRAWN BY: Z. SANGALANG
CHECKED BY: J. MAHON

SHEET TITLE

MECHANICAL

METER CHAMBER PLAN AND TYPICAL DETAILS

SCALE: AS SHOWN

M–04

SHEET 7 OF 13

User:HAUSMANN Spec:AUS-NCSMOD File:G:\ACAD\PROJ\00266443.0000\CATSKILL TAP UPGRADE\RECORD DRAWINGS\0266443-M04.DWG Scale:1:1 SavedDate:9/28/2017 Time:10:17 Plot Date: Hausmann, Steve; 10/3/2017; 06:07 ; Layout:M-04

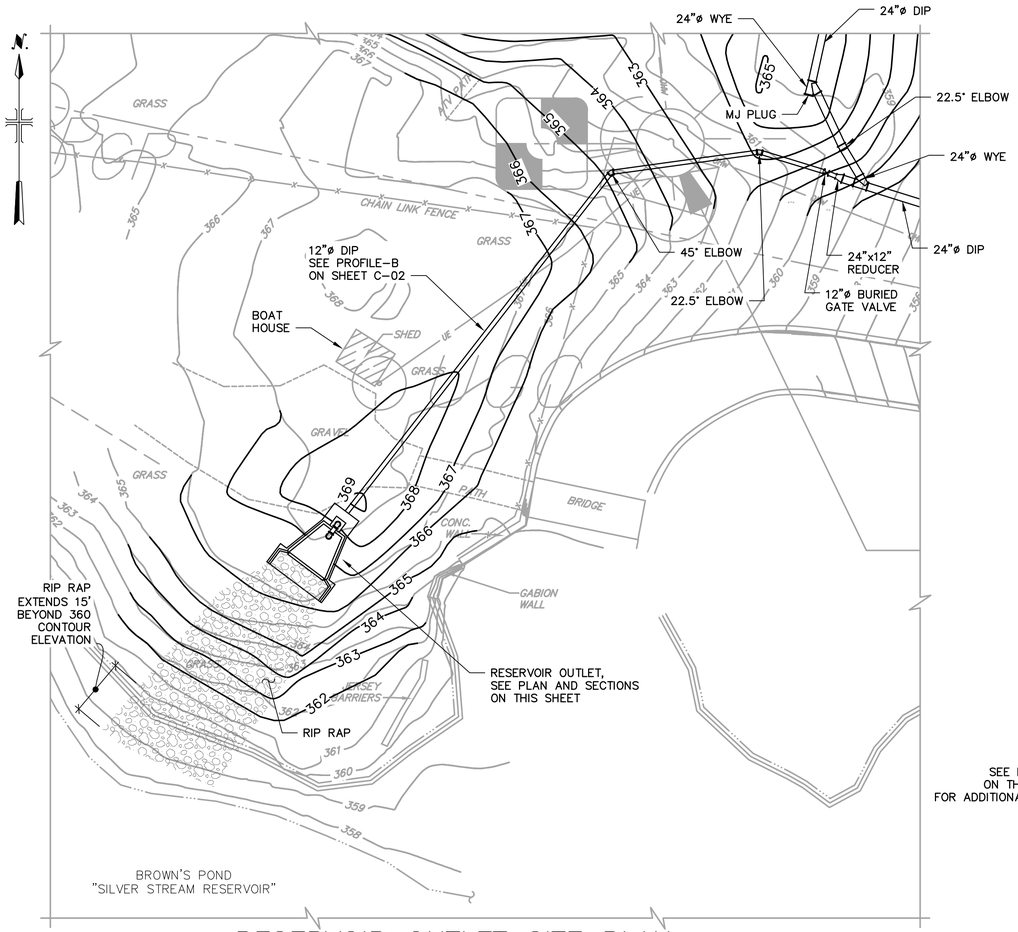

RESERVOIR OUTLET SITE PLAN

SCALE: 1" = 20'

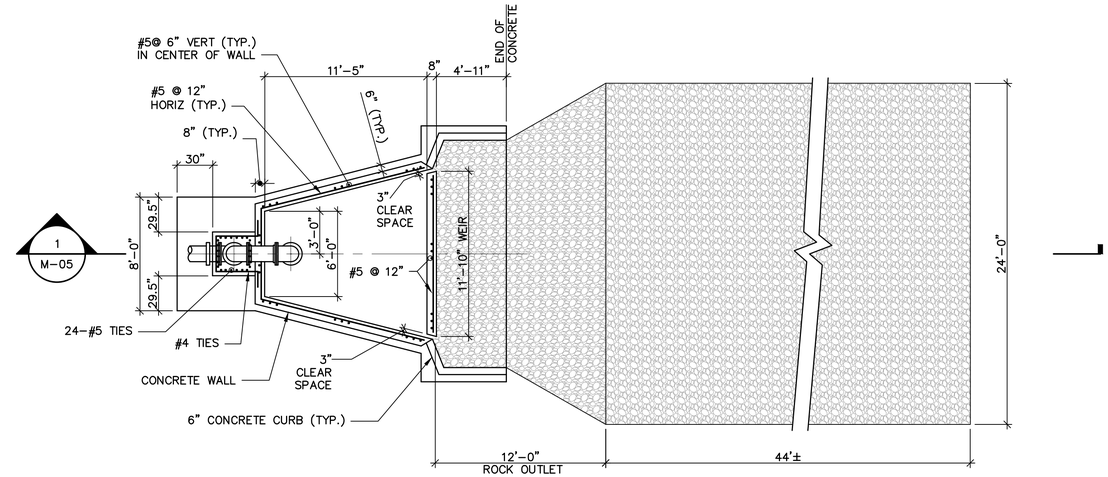

RESERVOIR OUTLET-PLAN VIEW

SCALE: 3/16" = 1'-0"

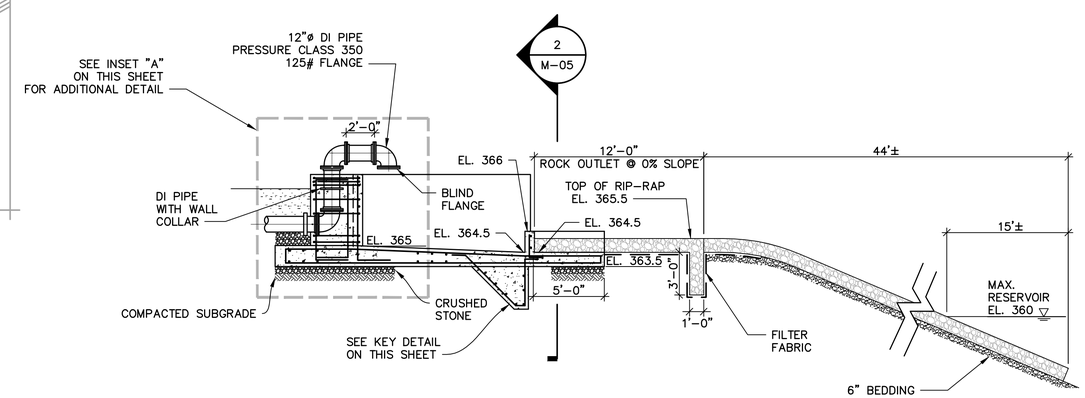

1 M-05 RESERVOIR OUTLET-SECTION VIEW

SCALE: 3/16" = 1'-0"

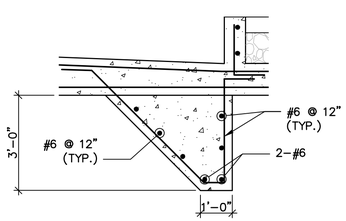

KEY DETAIL

NOT TO SCALE

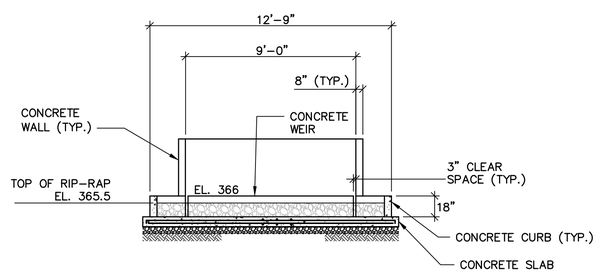

2 M-05 SECTION VIEW

NOT TO SCALE

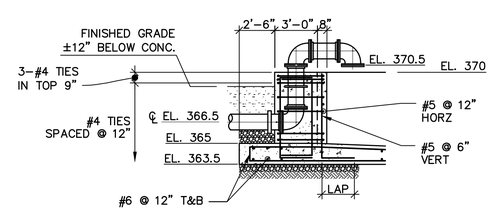

INSET "A"

NOT TO SCALE

WARNING – IT IS A VIOLATION OF NEW YORK EDUCATION LAW SECTION 7209.2, FOR ANY PERSON, UNLESS HE IS ACTING UNDER THE DIRECTION OF A LICENSED PROFESSIONAL ENGINEER OR LAND SURVEYOR, TO ALTER THIS DOCUMENT IN ANY WAY. IF ALTERED THE ALTERING PERSON SHALL COMPLY WITH THE REQUIREMENTS OF NEW YORK EDUCATION LAW, SECTION 7209.2.

ARCADIS

LEGAL ENTITY:
ARCADIS CE, INC.

CONSULTANTS

RECORD DRAWINGS

THIS DRAWING REFLECTS CHANGES FROM THE ORIGINAL CONTRACT DRAWING THAT WERE MADE DURING CONSTRUCTION AND HAS BEEN PREPARED FROM INFORMATION PROVIDED TO THE ENGINEER BY THE CONSTRUCTION CONTRACTOR(S)/OWNERS. THE ENGINEER DOES NOT WARRANT THIS DRAWING TO BE COMPLETE AND ACCURATE IN ALL RESPECTS.

ARCADIS-US

Date SEPTEMBER 2017 By RPV

SEALS

STATE OF NEW YORK · DANIEL JOHN LOEWENSTEIN · No. 066594 · LICENSED PROFESSIONAL ENGINEER

NEW YORK STATE OF OPPORTUNITY. Department of Environmental Conservation

CITY OF NEWBURGH

CATSKILL TAP EXTENSION TO BROWN'S POND RAW WATER PUMP STATION

NO.	DATE	ISSUED FOR	BY
1	SEPT 2017	RECORD DRAWINGS	RPV

COPYRIGHT: ARCADIS CE, INC. 2016

DATE:	SEPTEMBER 2017
PROJECT NO.:	00266443.0000
FILE NAME:	0266443-M05
DESIGNED BY:	A. CHAI
DRAWN BY:	S. HAUSMANN
CHECKED BY:	R. OSTAPCZUK

SHEET TITLE

MECHANICAL

RESERVOIR OUTLET PLAN, SECTIONS AND DETAILS

SCALE: AS SHOWN

M-05

SHEET 8 OF 13

User:HAUSMANN Spec:AUS-NCSMOD File:G:\ACAD\PROJ\00266443.0000\CATSKILL TAP UPGRADE\RECORD DRAWINGS\0266443-M05.DWG Scale:1:1 SavedDate:9/28/2017 Time:10:32 Plot Date: Hausmann, Steve; 10/3/2017; 06:07 ; Layout:M-05

INSTRUMENT IDENTIFICATION LEGEND

	FIRST LETTER		SUCCEEDING LETTERS		
	MEASURED OR INITIATING VARIABLE,	MODIFIER	READOUT OR PASSIVE FUNCTION	OUTPUT FUNCTION	MODIFIER
A	ANALYSIS		ALARM		
B	BURNER FLAME		NOT USED	NOT USED	NOT USED
C	CONDUCTIVITY (ELECTRICAL)			CONTROL	CLOSED
D	DENSITY (MASS) OR SPECIFIC GRAVITY	DIFFERENTIAL			
E	VOLTAGE (EMF)		PRIMARY ELEMENT		
F	FLOW RATE	RATIO (FRACTION)			
G	INTRUSION		GLASS GAGE (UNCALIBRATED)		
H	HAND (MANUALLY INITIATED)				HIGH
I	CURRENT (ELECTRICAL)		INDICATE		
J	POWER	SCAN			
K	TIME OR TIME SCHEDULE			CONTROL STATION	
L	LEVEL		LIGHT (PILOT)		LOW
M	MOISTURE OR HUMIDITY				MIDDLE OR INTER-MEDIATE
N	SEQUENCE, STRATEGY		NOT USED	NOT USED	NOT USED
O	NOT USED		ORIFICE (RESTRICTION)		OPEN
P	PRESSURE OR VACUUM		POINT (TEST CONNECTION)	PULSE	
Q	QUANTITY	INTEGRATE OR TOTALIZE			
R	RADIOACTIVITY		RECORD OR PRINT		
S	SPEED, FREQUENCY	SAFETY		SWITCH	
T	TEMPERATURE			TRANSMIT	
U	MULTIVARIABLE		MULTIFUNCTION	MULTIFUNCTION	MULTIFUNCTION
V	VIBRATION			VALVE, DAMPER OR LOUVER	
W	WEIGHT OR FORCE		WELL		
X	UNCLASSIFIED	X AXIS	UNCLASSIFIED	UNCLASSIFIED	UNCLASSIFIED
Y	EVENT STATUS	Y AXIS		RELAY OR COMPUTE	
Z	POSITION			DRIVE, ACTUATE OR UNCLASSIFIED FINAL CONTROL ELEMENT	

BASE INSTRUMENTATION SYMBOLS

FIT # — INSTRUMENT FIELD MOUNTED
SEE THIS SHEET FOR DETAILS OF INSTRUMENT TAGGING SYSTEM.
FULL TAG NUMBER SHOULD BE INCLUDED ON INSTRUMENT INDEX. POWER SUPPLY REQUIRED LOCALLY WHERE SHOWN.

FIR # — INSTRUMENT PANEL FACE MOUNTED

FY # X Y — INSTRUMENT RELAY MOUNTED IN REAR OF PANEL (BROKEN LINE). ACTIVATES AND DEACTIVATES CONTROL AND/OR ALARM SWITCHES AT PRESET VALUE. EQUIPMENT NUMBER (Y) ONLY WHEN NECESSARY. SEE BELOW FOR FUNCTIONS (X).

- △ DIFFERENCE
- > HIGH SELECTOR
- < LOW SELECTOR
- P/I PNEUMATIC/CURRENT CONVERTER
- I/I CURRENT/CURRENT CONVERTER (REPEATER)
- Σ SUMMATION
- AV AVERAGE
- % RATIO

ANALOG – PLC INPUT/OUTPUT

DISCRETE – PLC INPUT/OUTPUT

DISCRETE – PANEL INPUT/OUTPUT

ANALOG – PANEL INPUT/OUTPUT

DIGITAL COMMUNICATION INPUT/OUTPUT–ETHERNET (E), MODBUS (M), HART (H) OR DEVICENET (D)

- IAS INSTRUMENT AIR SUPPLY
- 120V 120V AC POWER SUPPLY
- 480V 480V AC POWER SUPPLY
- 24V 24V DC POWER SUPPLY

PROGRAMMABLE LOGIC CONTROLLER (PLC) CONTROL BLOCK

— POINT FOR SHARED VIDEO DISPLAY (FUNCTIONS IN PLC)

— AS ABOVE WITH LIMITED ACCESS

— INTERLOCK
– INTERLOCK CONTROL STRATEGY

FIT # — THERMAL MASS METER

FE # — MAGMETER

FIT # — VENTURI

FE # — ORIFICE PLATE

FE # — ROTAMETER

FE # — ANNUBAR FLOW METER

FLUME

LE # — ULTRASONIC OR RADAR ELEMENT

HSS # — SAFETY PULL CORD

ZS # — BELT ALIGNMENT SWITCH

INSTRUMENT TAGGING SYSTEM

FIT– 023

INSTRUMENT IDENTIFICATION

LOOP NUMBER

VALVE SYMBOLS

- GATE VALVE
- GLOBE VALVE
- PLUG VALVE
- DIAPHRAGM VALVE
- BALL VALVE
- PINCH VALVE
- NEEDLE VALVE
- CHECK VALVE
- BUTTERFLY VALVE
- RELIEF VALVE
- PRESSURE SELF REGULATING VALVE
- BACK PRESSURE SELF REGULATING VALVE
- S S — DIAPHRAGM VALVE WITH PILOT LINE AND SOLENOID
- AIR RELIEF VALVE
- S — SOLENOID
- FLANGE

PIPING SYMBOLS

- Y STRAINER
- VENT
- DIAPHRAGM SEAL WITH ISOLATION VALVE
- INLINE SEAL WITH ISOLATION VALVE
- PULSATION DAMPENER
- FLEXIBLE HOSE
- QUICK–CONNECT
- CALIBRATION COLUMN
- EYE WASH/EMERGENCY SHOWER
- UNION
- BACKFLOW PREVENTOR

- SINGLE BASKET STRAINER
- SW — SEAL WATER
- DRAIN
- REDUCER

EQUIPMENT SYMBOLS

- CENTRIFUGAL PUMP
- METERING PUMP
- SUBMERSIBLE PUMP
- VERTICAL TURBINE PUMP
- PROGRESSIVE CAVITY PUMP
- PERISTALTIC PUMP
- POSITIVE DISPLACEMENT PUMP
- DIAPHRAGM PUMP
- GRINDER/MACERATOR
- BLOWER, CENTRIFUGAL
- BLOWER POSITIVE DISPLACEMENT
- CENTRIFUGAL FAN
- AXIAL/MIXED FLOW PUMP
- CHLORINE INJECTOR/JET PUMP
- WEIR
- M — MOTOR
- GRIT SCREW

- MANUAL SCREEN
- VFD — VARIABLE FREQUENCY DRIVE
- MCC — MOTOR CONTROL CENTER

PANEL DEVICE SYMBOLS

HS L/O/R — HAND SWITCH (MANUAL SELECTOR)
FUNCTION SUBSCRIPT (LOCATION MAY VARY)

PB ESTOP — PUSHBUTTON
FUNCTION SUBSCRIPT (LOCATION MAY VARY)

FUNCTION SUBSCRIPTS FOR HAND SWITCH AND PUSHBUTTON CONTROLS:

ESTOP	E–STOP
F/O/R	FORWARD–OFF–REVERSE
F/O/JR	FORWARD–OFF–JOG REVERSE
H/O/A	HAND–OFF–AUTO
H/O/R	HAND–OFF–REMOTE
H/O/SBY	HAND–OFF–STANDBY
L/O/R	LOCAL–OFF–REMOTE
M/A	MANUAL–AUTO
M/O/A	MANUAL–OFF–AUTO
O/C	OPEN–CLOSE
O/O	ON–OFF
O/S/C	OPEN–STOP–CLOSE
RS	RESET
R/L	REMOTE–LOCAL
R/O	RUN–OFF
SC	SPEED CONTROL POTENTIOMETER
SCR	SILICON CRYSTAL RECTIFIER
S/S	START–STOP
S/SLO	START–STOP WITH LOCKOUT

G IL — INDICATING LIGHT UNIT
G–GREEN (OFF,STOP,CLOSED)
R–RED (RUN,START,OPEN)
W–WHITE (POWER ON)
A–AMBER (ALARM CONDITION)
F–FLASHES ON ELECTRIC OR MECHANICAL MALFUNCTION

1 — ISOLATION RELAY
1 = NOTE NUMBER

ELECTRONIC HORN

W — STROBE LIGHT
A – AMBER
W – WHITE
R – RED
B – BLUE

INTERCONNECTING LINES WITH DOT INDICATE ROUTING OF THE SAME SIGNAL.

INTERCONNECTING LINES WITHOUT DOT INDICATE ROUTING OF MORE THAN ONE SIGNAL

ABBREVIATIONS

PLC	PROGRAMMABLE LOGIC CONTROLLER
CV	CONTROL VALVE
CVV	CONTROL VALVE VAULT
VFD	VARIABLE FREQUENCY DRIVE
HMI	HUMAN MACHINE INTERFACE

GENERAL NOTES

1. COORDINATE WORK WITH OTHER DRAWINGS AND DISCIPLINES.
2. THE SYMBOLS SHOWN ON THIS SHEET ARE STANDARD DESIGNATIONS. NOT ALL SYMBOLS ARE APPLICABLE TO THE INCLUDED DIAGRAMS AND INSTRUMENT TAGGING SYSTEM.
3. NOT ALL PIPING, FITTINGS, AND TANK DETAILS ARE SHOWN. REFER TO PROCESS DRAWINGS FOR ACTUAL DETAILS.

LINE TYPES

- SOFTWARE LINK, SYSTEM FUNCTION CONNECTION OR COMMUNICATION LINK
- ETHERNET COMMUNICATION
- EQUIPMENT PACKAGE LIMIT
- MAIN PROCESS LINE
- AUXILIARY SYSTEMS
- ELECTRIC (ELECTRONIC) SIGNAL
- PNEUMATIC SIGNAL
- CAPILLARY LINE
- HYDRAULIC SIGNAL
- SONIC SIGNAL
- HEAT TRACED AND INSULATED
- T — TELEPHONE LINK
- FUTURE
- EXISTING

DRAWING CONTINUATION LEGEND

PROCESS LINES (ON/OFF PAGE):

PROCESS MEDIUM
CONN — AREA OR EQUIPMENT DRAWING I–XXX

UTILITY LINES (ON/OFF PAGE):

REMARKS 1
CONN — UTILITY DRAWING NUMBER
REMARKS 2

INSTRUMENT SIGNAL LINES (ON/OFF PAGE):

SIGNAL NAME
CONN DRAWING NUMBER

PROCESS LINE
NOT WITHIN THE BOUNDARY OF THIS SET OF DRAWINGS

PROCESS MEDIUM
PROCESS EQUIPMENT/AREA

INSTRUMENT SIGNAL LINE
NOT WITHIN THE BOUNDARY OF THIS SET OF DRAWINGS

SIGNAL NAME

CONN: CONNECTION NUMBER

WARNING – IT IS A VIOLATION OF NEW YORK EDUCATION LAW SECTION 7209.2, FOR ANY PERSON, UNLESS HE IS ACTING UNDER THE DIRECTION OF A LICENSED PROFESSIONAL ENGINEER OR LAND SURVEYOR, TO ALTER THIS DOCUMENT IN ANY WAY. IF ALTERED THE ALTERING PERSON SHALL COMPLY WITH THE REQUIREMENTS OF NEW YORK EDUCATION LAW, SECTION 7209.2.

ARCADIS

LEGAL ENTITY:
ARCADIS CE, INC.

CONSULTANTS

RECORD DRAWINGS

THIS DRAWING REFLECTS CHANGES FROM THE ORIGINAL CONTRACT DRAWING THAT WERE MADE DURING CONSTRUCTION AND HAS BEEN PREPARED FROM INFORMATION PROVIDED TO THE ENGINEER BY THE CONSTRUCTION CONTRACTOR(S)/OWNERS. THE ENGINEER DOES NOT WARRANT THIS DRAWING TO BE COMPLETE AND ACCURATE IN ALL RESPECTS.

ARCADIS-US
Date SEPTEMBER 2017 By RPV

SEALS

STATE OF NEW YORK · DANIEL JOHN LOEWENSTEIN · No. 066594 · LICENSED PROFESSIONAL ENGINEER

NEW YORK STATE OF OPPORTUNITY. Department of Environmental Conservation

CITY OF NEWBURGH

CATSKILL TAP EXTENSION TO BROWN'S POND RAW WATER PUMP STATION

NO.	DATE	ISSUED FOR	BY
1	SEPT 2017	RECORD DRAWINGS	RPV

COPYRIGHT: ARCADIS CE, INC. 2016

DATE:	SEPTEMBER 2017
PROJECT NO.:	00266443.0000
FILE NAME:	0266443–I01
DESIGNED BY:	I. HELY
DRAWN BY:	A. SELVARAJ
CHECKED BY:	J. CHIRIYANKANDATH

SHEET TITLE

INSTRUMENTATION

SYMBOLS AND LEGEND

SCALE: NOT TO SCALE

I–01

SHEET 9 OF 13

User:HAUSMANN Spec:AUS–NCSMOD File:G:\ACAD\PROJ\00266443.0000\CATSKILL TAP UPGRADE\RECORD DRAWINGS\0266443–I01.DWG Scale:1:1 SavedDate:9/28/2017 Time:11:25 Plot Date: Hausmann, Steve; 10/3/2017; 06:06 ; Layout:I–01

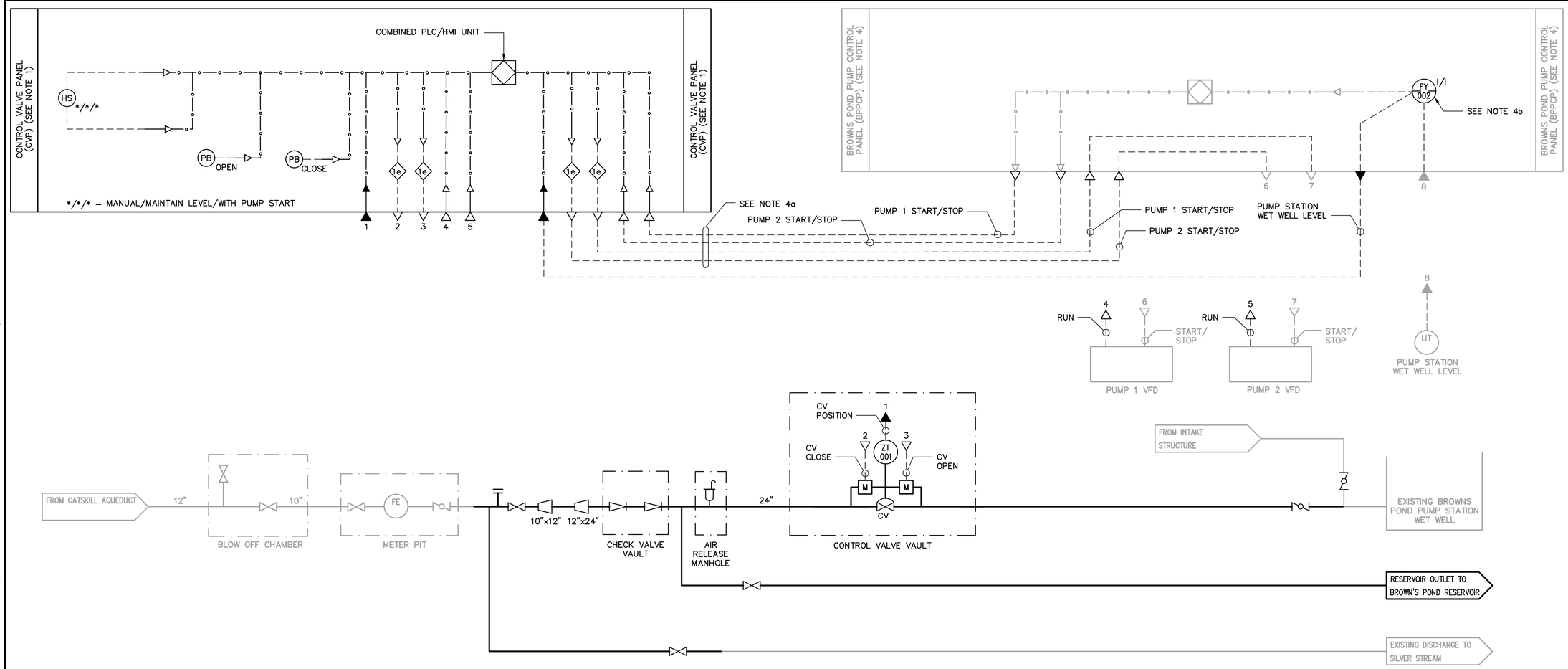

NOTES:

1. CONTROL VALVE PANEL (CVP) – 18"X18"X18" NEMA 12 ENCLOSURE WITH THE FOLLOWING SUBPANEL MOUNTED EQUIPMENT:
   a. CIRCUIT BREAKERS – THREE CIRCUIT BREAKERS. ONE CIRCUIT BREAKER PROVIDES POWER TO ALL PANEL COMPONENTS INCLUDING PLC, 24V POWER SUPPLY, ETC. ONE CIRCUIT BREAKER PROVIDES POWER TO WET THE OUTPUT RELAY CONTACTS WIRED TO THE SOLENOID VALVES THAT OPERATE THE CONTROL VALVE (CV). SEE NOTE 1.e BELOW. ONE CIRCUIT BREAKER IS A SPARE.
   b. POWER SUPPLY – 24 VDC POWER SUPPLY FOR POWERING ALL PANEL COMPONENTS THAT USE 24 VDC POWER AND FOR ANY LOOP POWERED 4 TO 20 MA SIGNALS.
   c. SURGE PROTECTORS – SURGE PROTECTOR FOR EACH SIGNAL WIRED TO CV. EACH SURGE PROTECTOR GROUNDED. THE FOLLOWING ARE PROVIDED:
      i. WEIDMULLER VSSC4 CL 24VAC/DC 0.5A FOR ANALOG SIGNALS.
      ii. WEIDMULLER VSSC4 MOV 120 VAC/DC FOR DISCRETE SIGNALS.
   d. TERMINALS – FUSED TERMINALS FOR TERMINATION OF ALL FIELD WIRING GOING OUT AND COMING INTO THE CONTROL PANEL. TERMINAL IDENTIFICATION FOR EACH WIRE TERMINATION. 50% SPARE TERMINALS PROVIDED.
   e. 24 VDC ISOLATION RELAYS FOR ALL PLC DISCRETE OUTPUTS WITH CONTACTS RATED FOR 5A. CONTACTS FOR THE TWO DISCRETE OUTPUT SIGNALS TO CV ARE WETTED FROM 120V PANEL POWER SUPPLIED THROUGH A SEPARATE CIRCUIT BREAKER IN THE CVP. (SEE NOTE 1a).
   f. OTHER ELECTRICAL COMPONENTS AND DEVICES, SUPPORT HARDWARE, FASTENERS, AND INTERCONNECTING WIRING REQUIRED TO PROVIDE CONTROL PANEL COMPLETE AND OPERATIONAL. CONTROL PANEL ARE UL LISTED.
   g. ONE 350VA UNINTERRUPTIBLE POWER SUPPLY PROVIDES BACKUP POWER TO ENTIRE PANEL (MANUFACTURERED BY APC).

NOTES (CONTD.):

2. PANEL MOUNTED INSTRUMENTS FOR THE CVP INCLUDE THE FOLLOWING:
   a. PLC/HMI – UNITRONICS M91–2–R2C.
   b. SELECTOR SWITCHES AND PUSHBUTTONS AS SHOWN.
3. THE CVP HMI DISPLAY CONFIGURED AS FOLLOWED:
   a. VALVE STATUS – OPEN, CLOSED, POSITION INDICATION
   b. SETTINGS CONTROL – ACCESS TO ALL ADJUSTABLE SETTINGS INCLUDING LEVEL SETPOINTS, POSITION SETPOINTS, AND TIME DELAYS. (SEE DRAWING I–03 FOR CONTROL DESCRIPTION).
4. MODIFICATIONS TO THE EXISTING BROWNS POND PUMP CONTROL PANEL:
   a. THE EXISTING PUMP START/STOP OUTPUT CONTROL SIGNALS GOING FROM THE EXISTING BPPCP TO THE TWO EXISTING PUMP VFDS WERE INTERCEPTED AND REROUTED THROUGH THE CVP. FOR EACH PUMP VFD START/STOP SIGNAL, THE EXISTING FIELD WIRING GOING TO THE VFD FROM THE FIELD TERMINALS IN THE BPPCP WERE DISCONNECTED AND IN ITS PLACE NEW WIRING GOING TO THE DISCRETE INPUT IN THE CVP CONNECTED. THE START/STOP SIGNALS GOING TO THE VFDS ARE DELAYED UNTIL CV HAS BEEN OPENED TO A PRESET POSITION. NEW WIRING TO THE FIELD TERMINALS IN THE CVP THAT ARE DESIGNATED AS PUMP START/STOP OUTPUT SIGNALS CONNECTED. THE OTHER END OF THESE WIRES WERE TERMINATED ON SPARE TERMINALS IN THE BPPCP . THE EXISTING START/STOP SIGNAL WIRING GOING TO THE VFDS RECONNECTED (DISCONNECTED IN THE FIRST STEP) TO THE SPARE TERMINALS SO THAT THE START/STOP SIGNALS FROM THE CVP CONTINUE TO THE VFDS. THE COMPLETED FIELD WIRING BETWEEN BPPCP AND CVP MATCH THE WIRING SHOWN ON THIS DRAWING.

NOTES (CONTD):

   b. I/I CURRENT SPLITTER PROVIDED TO SPLIT THE EXISTING 4 TO 20 MA SIGNAL FROM THE WET WELL LEVEL TRANSMITTER AS SHOWN ON THIS DRAWING. ONE 4 TO 20 MA SIGNAL FROM THE SPLITTER TO THE EXISTING BPPCP PLC INPUT, THE OTHER 4 TO 20 MA SIGNAL WIRED TO THE CVP.
   c. A 350VA UNINTERRUPTIBLE POWER SUPPLY PROVIDES BACKUP POWER TO BPPCP PANEL (MANUFACTURERED BY APC).

WARNING – IT IS A VIOLATION OF NEW YORK EDUCATION LAW SECTION 7209.2, FOR ANY PERSON, UNLESS HE IS ACTING UNDER THE DIRECTION OF A LICENSED PROFESSIONAL ENGINEER OR LAND SURVEYOR, TO ALTER THIS DOCUMENT IN ANY WAY. IF ALTERED THE ALTERING PERSON SHALL COMPLY WITH THE REQUIREMENTS OF NEW YORK EDUCATION LAW, SECTION 7209.2.

ARCADIS

LEGAL ENTITY:
ARCADIS CE, INC.

CONSULTANTS

RECORD DRAWINGS

THIS DRAWING REFLECTS CHANGES FROM THE ORIGINAL CONTRACT DRAWING THAT WERE MADE DURING CONSTRUCTION AND HAS BEEN PREPARED FROM INFORMATION PROVIDED TO THE ENGINEER BY THE CONSTRUCTION CONTRACTOR(S)/OWNERS. THE ENGINEER DOES NOT WARRANT THIS DRAWING TO BE COMPLETE AND ACCURATE IN ALL RESPECTS.

ARCADIS-US
Date SEPTEMBER 2017 By RPV

SEALS

STATE OF NEW YORK • DANIEL JOHN LOEWENSTEIN • LICENSED PROFESSIONAL ENGINEER • LIC. NO. 066594

NEW YORK STATE OF OPPORTUNITY. Department of Environmental Conservation

CITY OF NEWBURGH

CATSKILL TAP EXTENSION TO BROWN'S POND RAW WATER PUMP STATION

NO.	DATE	ISSUED FOR	BY
1	SEPT 2017	RECORD DRAWINGS	RPV

COPYRIGHT: ARCADIS CE, INC. 2016

DATE: SEPTEMBER 2017
PROJECT NO.: 00266443.0000
FILE NAME: 0266443–I02
DESIGNED BY: I. HELY
DRAWN BY: A. SELVARAJ
CHECKED BY: J. CHIRIYANKANDATH

SHEET TITLE

INSTRUMENTATION

PROCESS & INSTRUMENTATION DIAGRAM

SCALE: NOT TO SCALE

I–02

SHEET 10 OF 13

User:HAUSMANN Spec:AUS-NCSMOD File:G:\ACAD\PROJ\00266443.0000\CATSKILL TAP UPGRADE\RECORD DRAWINGS\0266443-I02.DWG Scale:1:1 SavedDate:9/28/2017 Time:11:10 Plot Date: Hausmann, Steve; 10/3/2017; 06:06 ; Layout:I-02

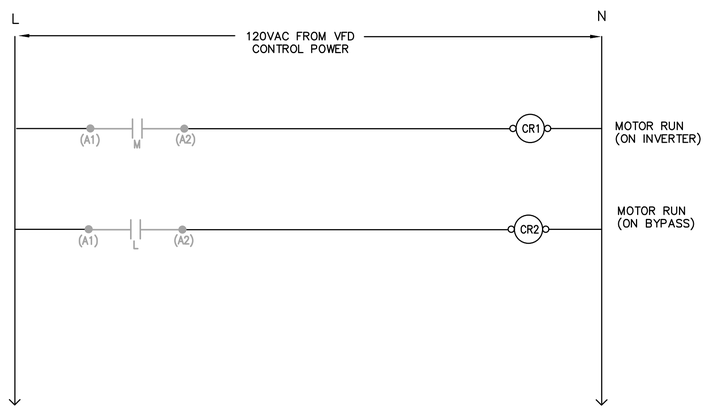

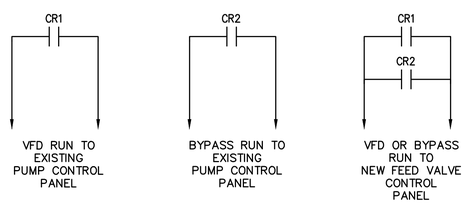

NOTES:

1. MODIFICATIONS TO EACH EXISTING PUMP VFD:

   a. TWO NEW DOUBLE POLE DOUBLE THROW RELAYS IN THE EXISTING VFD PANELS INSTALLED.

   b. THE EXISTING INTERNAL PANEL WIRING FROM THE FIELD TERMINALS THAT COMES FROM THE DRY CONTACTS OF THE "M" AND "L" REMOVED, AND CONNECTED TO THE NEW RELAY COILS AS SHOWN ABOVE. THE RELAYS ARE POWERED FROM THE VFD PANEL POWER.

   c. THE DRY CONTACTS FROM EACH RELAY WIRED IN PARALLEL SUCH THAT ONE COMMON SIGNAL FOR VFD OR BYPASS RUN GOES TO THE CVP.

   d. EXISTING WIRING RECONNECTED.

EXISTING VFD WIRING MODIFICATIONS

CONTROL VALVE CONTROL DESCRIPTION:

1. THREE POSITION SELECTOR SWITCH PROVIDED TO SELECT BETWEEN THREE MODES OF OPERATION FOR VALVE CONTROL. THE THREE MODES ARE:

   a. MANUAL MODE
   b. MAINTAIN WET WELL LEVEL MODE
   c. WITH PUMP START MODE

2. IN "MANUAL" MODE, THE OPERATOR IS ABLE TO OPEN AND CLOSE THE VALVE FROM THE CONTROL VALVE PANEL (CVP) WITH OPEN AND CLOSE PUSHBUTTONS. OPEN, CLOSED, AND POSITION INDICATION STATUS ARE PROVIDED ON THE PANEL HMI. IN MANUAL MODE, THE OPERATOR MUST HOLD THE OPEN PUSHBUTTON TO OPEN THE CONTROL VALVE UNTIL IT HAS REACHED THE DESIRED POSITION. TO CLOSE THE VALVE IN MANUAL MODE THE OPERATOR NEED ONLY PRESS THE CLOSE PUSHBOTTOM MOMENTARILY AND THE VALVE WILL CLOSE COMPLETELY. THE OPEN PUSHBOTTON MAY BE PRESSED TO HOLD THE POSITION OF THE CONTROL VALVE. THE EXISTING PUMPS OPERATE INDEPENDENTLY WHEN IN THIS MODE. THE PUMP START/STOP SIGNALS ARE SENT TO THE VFD WITHOUT A TIME DELAY.

3. IN "MAINTAIN WET WELL LEVEL" MODE, THE PLC IS PROGRAMMED TO OPEN AND CLOSE THE VALVE BASED ON THE FOLLOWING SETTINGS:

   a. OPEN VALVE ONCE THE WET WELL LEVEL DROPS BELOW THE VALVE OPEN LEVEL SETPOINT: SET VALUE: WSEL 342.42 (12.5FT AS MEASURED FROM THE BOTTOM OF THE WELL)
   b. CLOSE VALVE ONCE THE WET WELL LEVEL RISES ABOVE THE VALVE CLOSE LEVEL SETPOINT: SET VALUE: WSEL 343.42 (13.5FT AS MEASURED FROM THE BOTTOM OF THE WELL)

   THE EXISTING PUMPS OPERATE INDEPENDENTLY WHEN IN THIS MODE. THE PUMP START/STOP SIGNALS ARE SENT TO THE VFD WITHOUT A TIME DELAY.

4. IN "WITH PUMP START" MODE, THE PLC IS PROGRAMMED TO OPEN THE VALVE UPON THE RECEIPT OF A PUMP START COMMAND FROM THE EXISTING BPPCP. ONCE THE VALVE HAS OPENED TO 10% (ADJUSTABLE), THE PLC SENDS THE PUMP START OUTPUT SIGNAL BACK TO THE EXISTING BPPCP SO THAT THE PUMP(S) CAN BE STARTED. UPON THE RECEIPT OF THE PUMP STOP COMMAND FROM THE BPPCP, THE PLC SENDS THE PUMP STOP OUTPUT SIGNAL TO THE EXISTING BPPCP AT ONCE, SO THAT THE PUMP(S) CAN BE STOPPED. ONCE ALL PUMPS HAVE STOPPED, THE VALVE CLOSES WHEN THE WET WELL RISES ABOVE THE VALVE CLOSE LEVEL SETPOINT: SET VALUE: WSEL 343.42 (13.5FT AS MEASURED FROM THE BOTTOM OF THE WELL).

5. WHEN THE VALVE IS COMMANDED TO OPEN IN ANY MODE OF OPERATION, THE PLC IS PROGRAMMED TO SEND THE "OPEN" SIGNAL UNTIL THE VALVE REACHES THE "MAXIMUM OPEN POSITION," SET TO 50% OPEN (ADJUSTABLE) OR UNTIL IT REACHES THE VALVE CLOSE LEVEL SETPOINT. IN MANUAL MODE THE OPERATOR MUST HOLD THE OPEN PUSHBUTTON TO OPEN THE CONTROL VALVE. THE CONTROL VALVE WILL NOT OPEN ANY FURTHER THAN THE "MAXIMUM OPEN POSITION" IN ANY MODE OF OPERATION.

6. WHEN THE VALVE IS COMMANDED TO CLOSE IN ANY MODE OF OPERATION, THE PLC IS PROGRAMMED TO SEND THE "CLOSE" SIGNAL UNTIL THE VALVE IS FULLY CLOSED.

7. SETPOINTS ARE OPERATOR ADJUSTABLE THROUGH THE HMI.

CONTROL DESCRIPTIONS

WARNING – IT IS A VIOLATION OF NEW YORK EDUCATION LAW SECTION 7209.2, FOR ANY PERSON, UNLESS HE IS ACTING UNDER THE DIRECTION OF A LICENSED PROFESSIONAL ENGINEER OR LAND SURVEYOR, TO ALTER THIS DOCUMENT IN ANY WAY. IF ALTERED THE ALTERING PERSON SHALL COMPLY WITH THE REQUIREMENTS OF NEW YORK EDUCATION LAW, SECTION 7209.2.

ARCADIS
LEGAL ENTITY:
ARCADIS CE, INC.
CONSULTANTS

RECORD DRAWINGS

THIS DRAWING REFLECTS CHANGES FROM THE ORIGINAL CONTRACT DRAWING THAT WERE MADE DURING CONSTRUCTION AND HAS BEEN PREPARED FROM INFORMATION PROVIDED TO THE ENGINEER BY THE CONSTRUCTION CONTRACTOR(S)/OWNERS. THE ENGINEER DOES NOT WARRANT THIS DRAWING TO BE COMPLETE AND ACCURATE IN ALL RESPECTS.

ARCADIS-US
Date SEPTEMBER 2017 By RPV

SEALS

STATE OF NEW YORK · DANIEL JOHN LOEWENSTEIN · No. 066594 · LICENSED PROFESSIONAL ENGINEER

NEW YORK STATE OF OPPORTUNITY. Department of Environmental Conservation

CITY OF NEWBURGH

CATSKILL TAP EXTENSION TO BROWN'S POND RAW WATER PUMP STATION

NO.	DATE	ISSUED FOR	BY
1	SEPT 2017	RECORD DRAWINGS	RPV

COPYRIGHT: ARCADIS CE, INC. 2016

DATE: SEPTEMBER 2017
PROJECT NO.: 00266443.0000
FILE NAME: 0266443–I03
DESIGNED BY: I. HELY
DRAWN BY: A. SELVARAJ
CHECKED BY: J. CHIRIYANKANDATH

SHEET TITLE

INSTRUMENTATION

VFD WIRING DIAGRAM & ADDITIONAL NOTES

SCALE: NOT TO SCALE

I–03

SHEET 11 OF 13

User:HAUSMANN Spec:AUS-NCSMOD File:G:\ACAD\PROJ\00266443.0000\CATSKILL TAP UPGRADE\RECORD DRAWINGS\0266443-I03.DWG Scale:1:1 SavedDate:9/28/2017 Time:11:14 Plot Date: Hausmann, Steve; 10/3/2017; 06:06 ; Layout:I-03

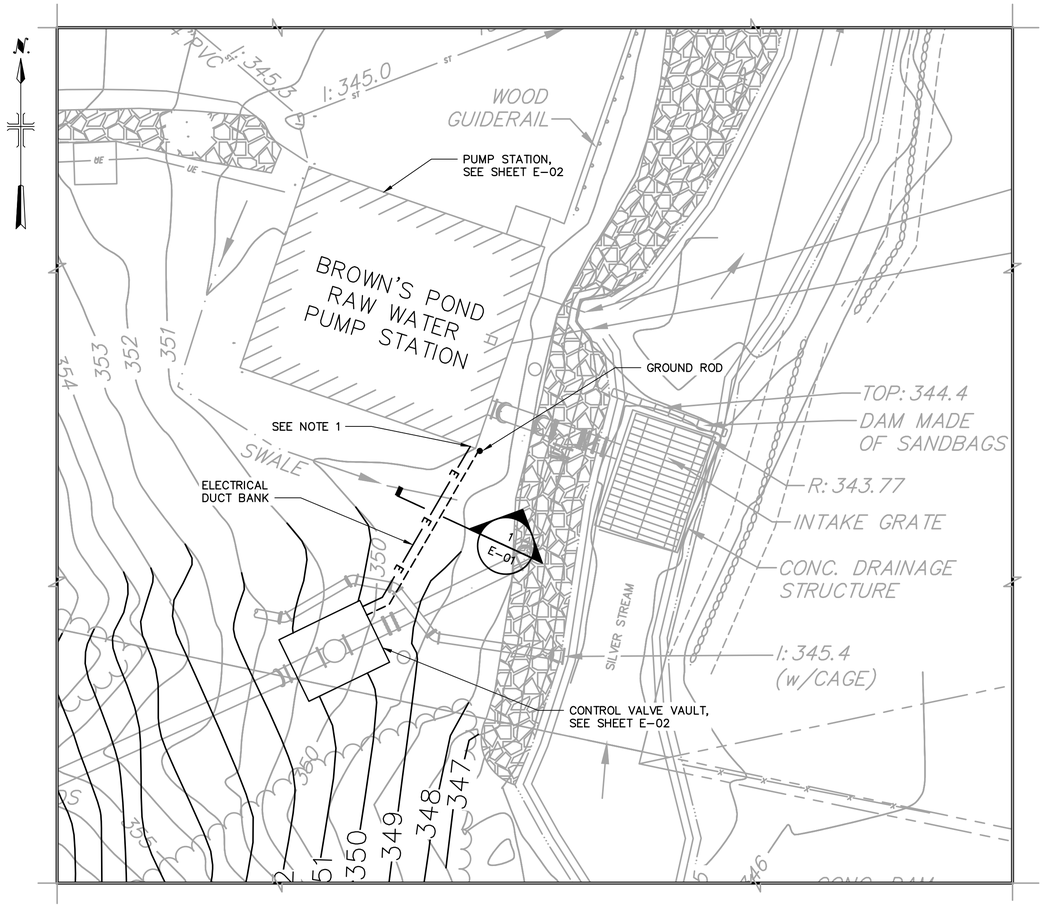

ELECTRICAL SITE PLAN

SCALE: 1" = 10'

0 5' 10' 20'

COMMUNICATIONS CABLE LEGEND

TSP: NO. 16 AWG, TWISTED PAIRS WITH SHIELD OVER EACH PAIR WITH CL2, CM. BELDEN #8719.

CAT6: DATATWIST6, SHIELDED CABLE. NONBONDED-PAIR, 4-PAIR, CMP, CATEGORY 6, BELDEN #1352A.

WIRING METHODS

THE PUMP STATION AND DUCTBANK ARE CONSIDERED DUSTY LOCATIONS. THE CONTROL VALVE VAULT IS CONSIDERED A WET LOCATION.

LOCATION	RACEWAY	WIRE	ENCLOSURE
WET	PVC-RMC	RHW-2	NEMA 4X
DUSTY	RMC	RHW-2	NEMA 12
DRY	RMC	RHW-2	NEMA 1

NOTES

1. RACEWAYS TURNED UP FROM DUCT BANK. PENETRATE THROUGH WALL OF PUMP STATION AT 2'-0" AFF.
2. DUCT BANK DIMENSION (1'-0" MINIMUM) VARIES TO CLEAR OTHER UNDERGROUND SYSTEMS AND TO MAINTAIN SLOPE AS REQUIRED.
3. SEE PUMP STATION AND CVV BLOCK DIAGRAM ON SHEET E-02 FOR CONDUIT LABELING.

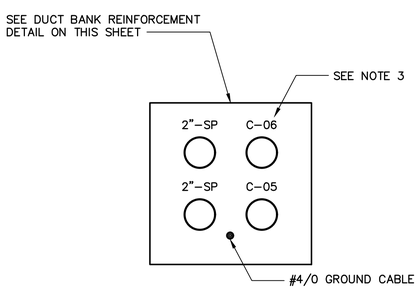

1 / E-01 DUCT BANK SECTION

NOT TO SCALE

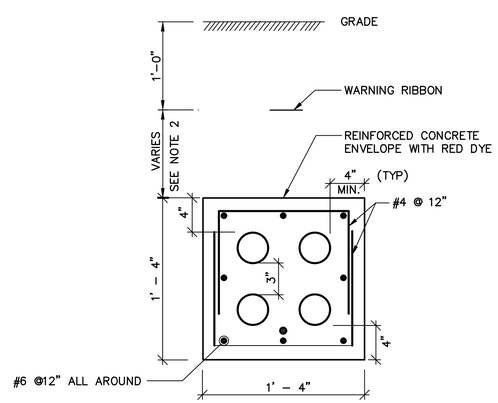

DUCT BANK REINFORCEMENT

NOT TO SCALE

WARNING – IT IS A VIOLATION OF NEW YORK EDUCATION LAW SECTION 7209.2, FOR ANY PERSON, UNLESS HE IS ACTING UNDER THE DIRECTION OF A LICENSED PROFESSIONAL ENGINEER OR LAND SURVEYOR, TO ALTER THIS DOCUMENT IN ANY WAY. IF ALTERED THE ALTERING PERSON SHALL COMPLY WITH THE REQUIREMENTS OF NEW YORK EDUCATION LAW, SECTION 7209.2.

ARCADIS

LEGAL ENTITY:
ARCADIS CE, INC.

CONSULTANTS

RECORD DRAWINGS

THIS DRAWING REFLECTS CHANGES FROM THE ORIGINAL CONTRACT DRAWING THAT WERE MADE DURING CONSTRUCTION AND HAS BEEN PREPARED FROM INFORMATION PROVIDED TO THE ENGINEER BY THE CONSTRUCTION CONTRACTOR(S)/OWNERS. THE ENGINEER DOES NOT WARRANT THIS DRAWING TO BE COMPLETE AND ACCURATE IN ALL RESPECTS.

ARCADIS-US

Date SEPTEMBER 2017 By RPV

SEALS

STATE OF NEW YORK · DANIEL JOHN LOEWENSTEIN · LICENSED PROFESSIONAL ENGINEER · LIC. NO. 066594

NEW YORK STATE OF OPPORTUNITY. Department of Environmental Conservation

CITY OF NEWBURGH

CATSKILL TAP EXTENSION TO BROWN'S POND RAW WATER PUMP STATION

NO.	DATE	ISSUED FOR	BY
1	SEPT 2017	RECORD DRAWINGS	RPV

COPYRIGHT: ARCADIS CE, INC. 2016

DATE: SEPTEMBER 2017
PROJECT NO.: 00266443.0000
FILE NAME: 0266443-E01
DESIGNED BY: M. LADERMAN
DRAWN BY: H. SAFARPOUR
CHECKED BY: G. MOORE

SHEET TITLE

ELECTRICAL

SITE PLAN, NOTES, AND DUCTBANK SECTIONS

SCALE: AS SHOWN

E-01

SHEET 12 OF 13

User:HAUSMANN Spec:AUS-NCSMOD File:G:\ACAD\PROJ\00266443.0000\CATSKILL TAP UPGRADE\RECORD DRAWINGS\0266443-E01.DWG Scale:1:1 SavedDate:9/28/2017 Time:11:36 Plot Date: Hausmann, Steve: 10/3/2017; 06:05 ; Layout:E-01

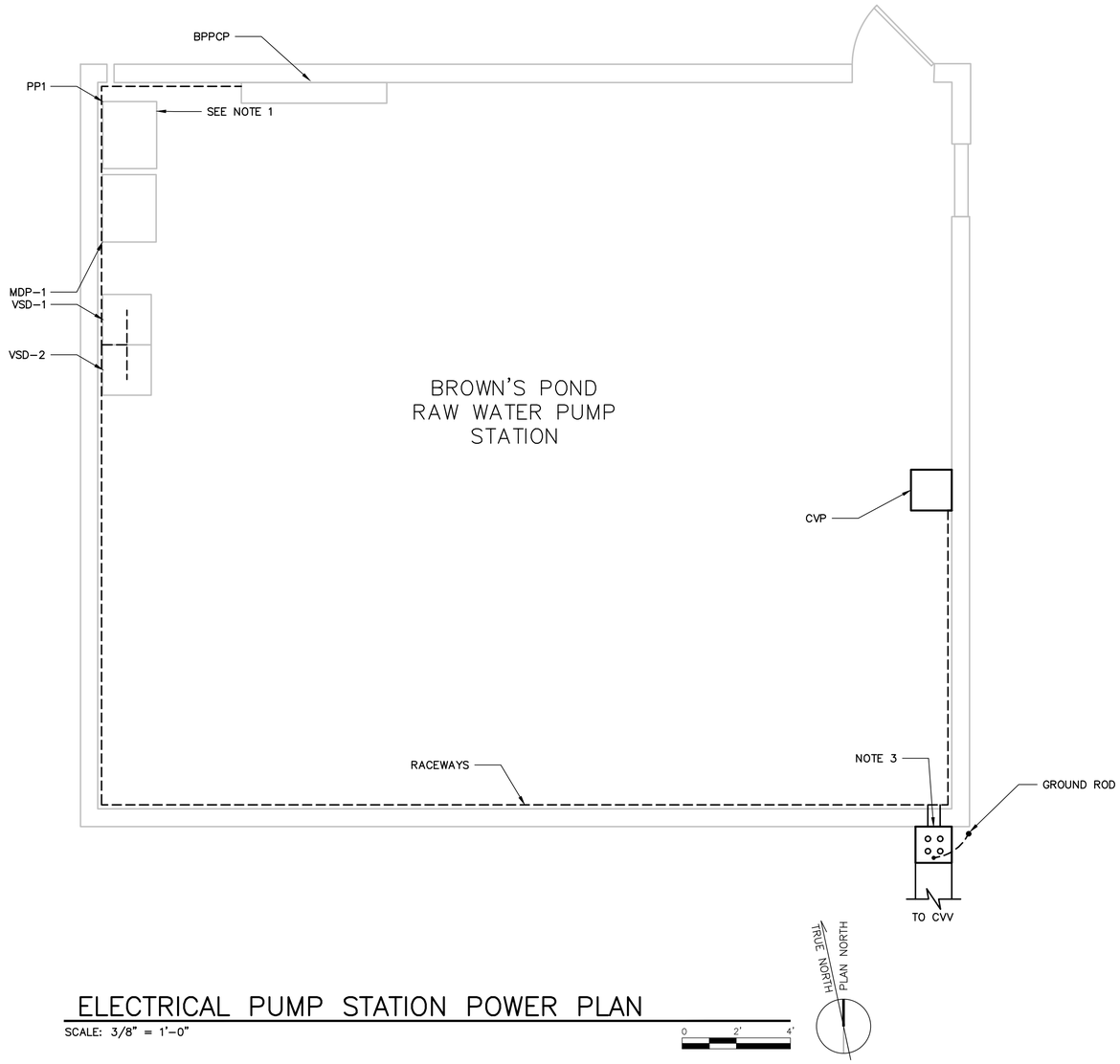

ELECTRICAL PUMP STATION POWER PLAN

SCALE: 3/8" = 1'-0"

0 2' 4'

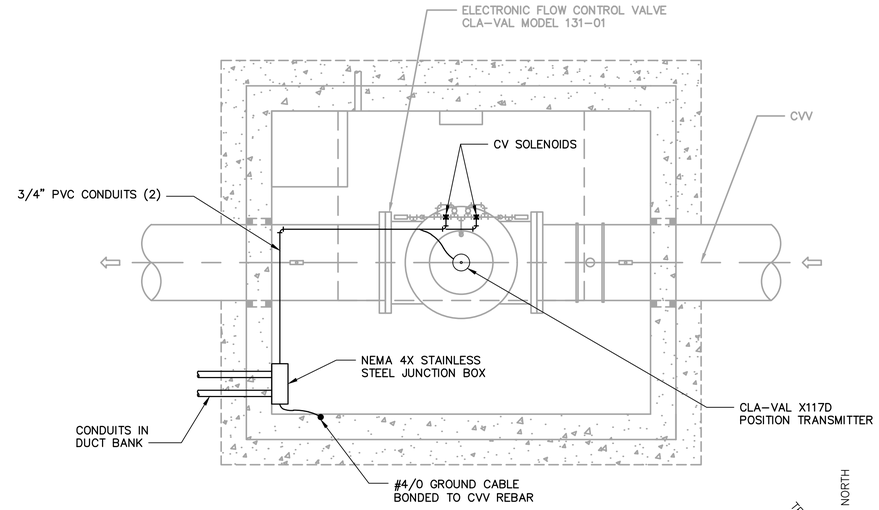

ELECTRICAL CVV POWER PLAN

SCALE: 1/2" = 1'-0"

0 1' 2' 4'

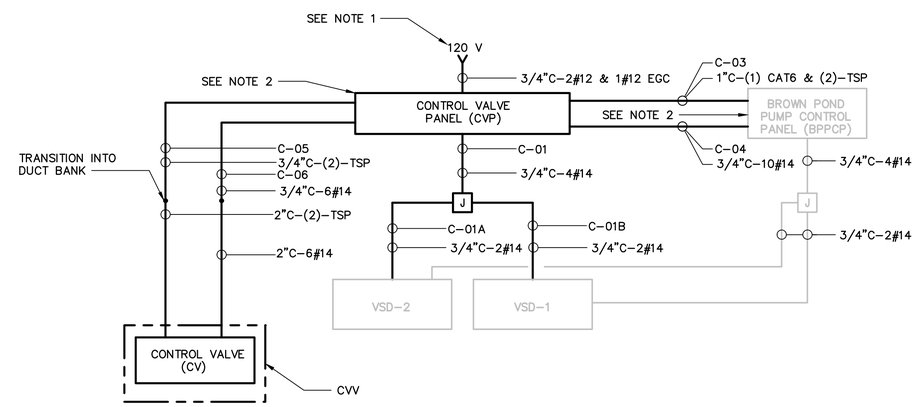

PUMP STATION AND CVV BLOCK DIAGRAM

NOTES:

1. SINGLE POLE 20A CB IN CKT#13 OF PANELBOARD PP1.
2. SEE SHEET I-03 FOR TERMINATION OF WIRING FOR BROWN POND PUMP CONTROL PANEL (BPPCP) IN PUMP STATION.
3. RACEWAYS TURNED UP FROM DUCTBANK. PENETRATE THROUGH WALL OF PUMP STATION AT 2'-0" AFF.

WARNING – IT IS A VIOLATION OF NEW YORK EDUCATION LAW SECTION 7209.2, FOR ANY PERSON, UNLESS HE IS ACTING UNDER THE DIRECTION OF A LICENSED PROFESSIONAL ENGINEER OR LAND SURVEYOR, TO ALTER THIS DOCUMENT IN ANY WAY. IF ALTERED THE ALTERING PERSON SHALL COMPLY WITH THE REQUIREMENTS OF NEW YORK EDUCATION LAW, SECTION 7209.2.

ARCADIS

LEGAL ENTITY:
ARCADIS CE, INC.

CONSULTANTS

RECORD DRAWINGS

THIS DRAWING REFLECTS CHANGES FROM THE ORIGINAL CONTRACT DRAWING THAT WERE MADE DURING CONSTRUCTION AND HAS BEEN PREPARED FROM INFORMATION PROVIDED TO THE ENGINEER BY THE CONSTRUCTION CONTRACTOR(S)/OWNERS. THE ENGINEER DOES NOT WARRANT THIS DRAWING TO BE COMPLETE AND ACCURATE IN ALL RESPECTS.

ARCADIS-US

Date SEPTEMBER 2017 By RPV

SEALS

STATE OF NEW YORK • DANIEL JOHN LOEWENSTEIN • LICENSED PROFESSIONAL ENGINEER • No. 066594

NEW YORK STATE OF OPPORTUNITY. Department of Environmental Conservation

CITY OF NEWBURGH

CATSKILL TAP EXTENSION TO BROWN'S POND RAW WATER PUMP STATION

NO.	DATE	ISSUED FOR	BY
1	SEPT 2017	RECORD DRAWINGS	RPV

COPYRIGHT: ARCADIS CE, INC. 2016

DATE: SEPTEMBER 2017
PROJECT NO.: 00266443.0000
FILE NAME: 0266443-E02
DESIGNED BY: M. LADERMAN
DRAWN BY: H. SAFARPOUR
CHECKED BY: G. MOORE

SHEET TITLE

ELECTRICAL

PUMP STATION AND CONTROL VALVE VAULT POWER PLANS

SCALE: AS SHOWN

E-02

SHEET 13 OF 13

User:HAUSMANN Spec:AUS-NCSMOD File:G:\ACAD\PROJ\00266443.0000\CATSKILL TAP UPGRADE\RECORD DRAWINGS\0266443-E02.DWG Scale:1:1 SavedDate:9/28/2017 Time:11:37 Plot Date: Hausmann, Steve; 10/3/2017; 06:06 ; Layout:E-02

RESOLUTION NO.: 326 - 2017

OF

NOVEMBER 27, 2017

A RESOLUTION AUTHORIZING THE CITY MANAGER TO ENTER INTO AN AMENDMENT TO THE AGREEMENT WITH THE NEW YORK STATE DEPARTMENT OF ENVIRONMENTAL CONSERVATION TO EXTEND THE TERM OF THE AGREEMENT FOR REIMBURSEMENT OF THE COST OF WATER PURCHASED FROM THE NEW YORK CITY CATSKILL AQUEDUCT

WHEREAS, perfluorooctane sulfonic acid (PFOS) has been detected in the City of Newburgh's water supply at levels in excess of the Environmental Protection Agency's recently released lifetime health advisory level; and

WHEREAS, there is a need to provide a temporary alternate source of drinking water to residents of the City of Newburgh, which has access to New York City's Catskill Aqueduct as a backup source of drinking water; and

WHEREAS, by Resolution No. 204-2016 of August 8, 2016, the City Council of the City of Newburgh authorized the City Manager to enter a Contract with the New York State Department of Environmental Conservation for reimbursement for the actual cost of water purchased from the New York City Catskill Aqueduct; and

WHEREAS, the need for the temporary alternate source of drinking water may extend past the original end date of the Contract and the parties have determined to extend the term of the Contract; and

WHEREAS, the City Council of the City of Newburgh has determined that extending the term of Contract with the Department of Environmental Conservation for reimbursement of the costs associated with providing a temporary alternate source of drinking water to City residents through the New York City Catskill Aqueduct is in the best interest of the City of Newburgh and its residents;

NOW, THEREFORE, BE IT RESOLVED, by the Council of the City of Newburgh, New York, that the City Manager be and he is hereby authorized to enter an Amendment to the Contract with the New York State Department of Environmental Conservation to extend the term of the Contract for reimbursement for the actual cost of water purchased from the New York City Catskill Aqueduct.

AMENDMENT TO CONTRACT
between
CITY OF NEWBURGH
and
NEW YORK STATE DEPARTMENT OF ENVIRONMENTAL CONSERVATION

THIS AMENDMENT, entered into by and between the New York State Department of Environmental Conservation (hereinafter referred to as the Department), having offices at 625 Broadway, Albany, New York 12233, and the City of Newburgh (hereinafter referred to as Newburgh), having offices at 83 Broadway, Newburgh, New York 12550 is hereby attached to and becomes incorporated into the above referenced contract.

WITNESSETH:

WHEREAS, the parties entered into a prior Contract which was duly assigned Contract Number C010219 which said Contract the parties now desire to extend; and,

WHEREAS, both parties originally agreed that the Department would reimburse Newburgh for the costs of a temporary alternate source of drinking water for the residents of Newburgh; and,

WHEREAS, the need for the temporary alternate source of drinking water may extend past the original end date of the Contract; and,

WHEREAS, the Contract provides for extending the Contract in Article 3: Term.

NOW THEREFORE, the parties hereto agree as follows:

1. Article 3 is revised by extending the end date of the Contract to November 1st, 2018

2. All other terms and conditions of Contract Number C010219 will remain in full force and effect.

SIGNATURE PAGE

Department Certification "In addition to the acceptance of this Contract Amendment, I also certify that original copies of this signature page will be attached to all other exact copies of the subject Contract."

NEWBURGH SIGNATURE
By:
Print Name:
Title:
Dated:

DEPARTMENT SIGNATURE
By:
Print Name:
Title:
Dated:

Newburgh Acknowledgement

State of _____)
) ss.:
County of _____)

On the _____day of _____ in the year_____, before me, the undersigned notary public, personally appeared _____, personally known to me or proved to me on the basis of satisfactory evidence to be the individual(s) whose name(s) is (are) subscribed to the within instrument and acknowledged to me that he/she/they executed the same in his/her/their capacity(ies), and that by his/her/their signature(s) on the instrument, the individual(s), or the person upon behalf of which the individual(s) acted, executed the instrument.

_____ Notary Public

ATTORNEY GENERAL'S SIGNATURE
Dated:

COMPTROLLER'S SIGNATURE
Approved: Thomas P. DiNapoli State Comptroller
Dated:

NEW YORK STATE DEPARTMENT OF ENVIRONMENTAL CONSERVATION

Division of Environmental Remediation, Remedial Bureau C
625 Broadway, 11th Floor, Albany, NY 12233-7014
P: (518) 402-9662 I F: (518) 402-9679
www.dec.ny.gov

Via Overnight Mail

September 8, 2016

Ms. Kathryn Mack
City of Newburgh Comptroller
83 Broadway
Newburgh, NY 12550

Re: Reimbursement Contract #C010219

Dear Ms. Mack:

Enclosed for your records is the executed contract for State reimbursement to the City of Newburgh for the purchase of water from New York City's Catskill Aqueduct. Please let me know if you have any questions about the contract.

Sincerely,

George W. Heitzman, P.E.
Director, Remedial Bureau C
Division of Environmental Remediation

Enclosure

NEW YORK STATE
DEPARTMENT OF ENVIRONMENTAL CONSERVATION
CONTRACT C010219

THIS CONTRACT is entered into by and between the New York State Department of Environmental Conservation (hereinafter referred to as the Department), having offices at 625 Broadway, Albany, New York 12233 and the City of Newburgh (hereinafter referred to as Newburgh), having offices at 83 Broadway, Newburgh, New York 12550.

WITNESSETH:

WHEREAS, perfluorooctane sulfonic acid (PFOS) has been detected in Newburgh's water supply at levels in excess of the Environmental Protection Agency's (EPA) recently released lifetime health advisory level; and,

WHEREAS, it has been determined by Legislative findings under Article 15 of the Environmental Conservation Law (ECL) that the State has the sovereign power to regulate and control the water resources of the State; and,

WHEREAS, in recognition of power under ECL §15-0105.5, the use of water for domestic and municipal purposes shall have priority over all other purposes; and,

WHEREAS, there is a need to provide a temporary alternate source of drinking water to residents of Newburgh; and,

WHEREAS, Newburgh has access to New York City's Catskill Aqueduct as a backup source of drinking water; and,

WHEREAS, after fully examining all of its internal capabilities and thoroughly investigating possible alternative approaches, the Department has determined that this can best be accomplished through a Contract.

NOW, THEREFORE, in consideration of the mutual promises herein contained, the parties hereto agree as follows:

ARTICLE 1: SCOPE

A. Newburgh agrees to obtain water from the Catskill Aqueduct for the use of its customers. Payment for the water will be made by Newburgh to New York City pursuant to a separate agreement between Newburgh and New York City.

B. The Department agrees to pay Newburgh for the actual cost of purchasing water from New York City as a temporary alternative water supply. Payment shall be based upon Article 2 of this Contract.

ARTICLE 2: PAYMENT

A. The Department shall pay to Newburgh and Newburgh shall accept from the Department as full compensation for the purchase of Catskill Aqueduct water an amount not to exceed $11,500,000.

B. Payment will be made to Newburgh at the established New York City Water Board rates in effect at the time of usage.

C. Upon approval of the contract by the Office of the State Comptroller, the Department will make an advance payment of $2,400,000 to Newburgh.

D. Newburgh shall submit invoices to the Department quarterly, with supporting documentation demonstrating the actual costs incurred and paid by Newburgh during the previous quarter for the purchase of New York City water. The Department will reimburse Newburgh for the actual costs incurred and paid by Newburgh for the purchase of New York City water.

E. The Department will authorize payment within 10 days of receipt of invoices and supporting documentation submitted per paragraph D of this article. The Department will make best efforts to arrange payment within 30 days of receipt of those invoices and supporting documentation.

F. At the end of the contract, the Department will perform a final reconciliation and Newburgh shall return unused advance funds, if any, to the Department within 30 days from the Department's notice to Newburgh of any overpayment.

G. Newburgh will submit requests for payment, together with supporting documentation, to the Department. Request for payment must be submitted within 45 days of the end of each State fiscal year which is March 31. Failure to comply with this request or notify the Department in writing prior to March 31st regarding billing problems shall operate as a waiver by Newburgh for reimbursement by the Department.

H. If the term of this Contract encompasses more than one State fiscal year, Newburgh shall incur no costs hereunder in subsequent fiscal years without the express written authority of the Department.

I. Payments for expenditures incurred under this contract will be rendered electronically to Newburgh unless payment by paper check is expressly authorized by the Commissioner of the Department (Commissioner), in the Commissioner's sole discretion, due to extenuating circumstances. Such electronic payment shall be made in accordance with ordinary State procedures and practices. Newburgh shall comply with the Office of the State Comptroller's procedures to authorize electronic payments. Authorization forms are available at the Comptroller's website at www.osc.state.ny.us/epay/index.htm, or by e-mail at epayments@osc.state.ny.us. Newburgh acknowledges that it will not receive payment under this Contract if it does not comply with the Office of the State Comptroller's electronic payment procedures, except where the Commissioner has expressly authorized payment by paper check as set forth above.

ARTICLE 3: TERM

A. The term of this Contract shall be from June 1, 2016 to October 31, 2017. The Contract shall be effective upon approval by the Office of the State Comptroller.

B. This Contract may be extended for a maximum of two one-year periods upon the mutual written consent of both parties and the approval of the Office of the State Comptroller.

C. Amendments other than exercising the term options above must be in writing and submitted to the Attorney General and the Office of the State Comptroller for approval.

ARTICLE 4: NOTICES

Wherever it is provided in this Contract that notice shall be given or other communications sent to the Department or Newburgh, such notices or communications shall be delivered or sent by First Class Mail to:

Department:
George Heitzman
Director, Remedial Bureau C
Division of Environmental Remediation
NYS Department of Environmental Conservation
625 Broadway
Albany, NY 12233-7014
Telephone Number: (518) 402-9662
E-Mail: george.heitzman@dec.ny.gov

Newburgh:

Kathryn Mack
City of Newburgh Comptroller
83 Broadway
Newburgh, NY 12550
Telephone Number: (845) 569-7360
E-Mail: kmack@cityofnewburgh-ny.gov

ARTICLE 5: LIABILITY

Newburgh shall be responsible for all damage to life and property due to activities of Newburgh, its subcontractors, agents, or employees, in connection with its Services under this Contract, and this obligation is in no way limited by the enumeration of insurance coverages hereunder. Further, it is expressly understood that Newburgh shall indemnify and save harmless the Department, its officers, employees, agents, and assigns in accordance with the provisions of Appendix B, Clause II.

Nothing in this Contract is intended to obligate Newburgh to indemnify the State or any other party with respect to the PFOS contamination.

Nothing in this Article or in this Contract shall create or give to third parties any claim or right of action against Newburgh or the State of New York beyond such as may legally exist irrespective of this Article or this Contract.

ARTICLE 6: DEFAULT AND TERMINATION

A. The Department shall have the right to postpone, suspend, abandon, or terminate this Contract, and such actions shall in no event be deemed a breach of Contract. In any of these events, the Department shall make settlement with Newburgh upon an equitable basis as determined by the Department, which shall fix the value of the work which was performed by the Newburgh prior to the postponement, suspension, abandonment, or termination of the Contract.

B. The State shall have the right to terminate this Contract for:

1) unavailability of funds

2) cause

a) If the Department determines that Newburgh has breached a material term of this Contract, it shall issue a written notice, providing Newburgh with 10 days to correct the defect. If Newburgh fails to correct the defect within this time period, or fails to make a good faith effort to do so as determined by the Department, the Department may terminate this Contract for cause.

3) convenience

a) If the termination is for the convenience of the Department, and is not brought about as a result of unsatisfactory performance on the part of Newburgh, the Department shall pay for the usage incurred up to the date of termination.

ARTICLE 7: STANDARD CONTRACT CLAUSES

Newburgh will be required to comply with all of the mandatory New York State and Department contracting provisions contained in the following two attached documents:

Appendix A - Standard Clauses for All New York State Contracts;
Appendix B - Standard Clauses for All NYSDEC Contracts.

ARTICLE 8: ENTIRE CONTRACT

This Contract consists of the following documents in the following order of precedence.

1. Appendix A
2. Appendix B
3. The Contract

ARTICLE 9: AFFIRMATIVE ACTION REQUIREMENTS

Newburgh must make good faith efforts to subcontract an overall goal of 0% of the contract amount to Minority and Women Owned Business Enterprises (MWBE's). Newburgh must make good faith efforts to employ 10 % minority group members and 10 % women for a portion of any workforce hours required to perform the work under this contract. Appendix B further defines the M/WBE and EEO provisions required by Executive Law, Article 15A.

ARTICLE 10: INSURANCE CONSIDERATIONS

Newburgh agrees to procure and maintain at its own expense and without expense to the Department Worker's Compensation Insurance and Disability Benefits by insurance companies licensed to do business in the State of New York, covering all operations under this Contract.

Newburgh shall furnish a certificate or certificates showing that it has complied with the Worker's Compensation and Disability Benefits requirements of this Article detailed below. The certificate or certificates shall provide that:

- Policies shall not be changed or canceled until thirty (30) days prior written notice has been given to the Department.
- Worker's Compensation and Disability Benefits certificates shall name the New York State Department of Environmental Conservation, Division of Environmental Remediation, Bureau of Program Management, 625 Broadway, Albany, NY 12233-7012, as certificate holder.
- This Contract shall be void and of no effect unless Newburgh procures the required insurance policies and maintains them until acceptance/completion of the work, whichever event is later.
- Newburgh shall require that any subcontractors hired, carry insurance with the same provisions as provided herein. Newburgh will maintain the certificate or certificates for all subcontractors hired as part of Newburgh's records.

The Department has reviewed the scope of work being accomplished under this contract and has determined that it will rely on the standard operating procedures and good business practices of Newburgh with respect to securing all appropriate types and amounts of liability insurance and appropriate endorsements. The Department waives its standard requirements for liability insurance certificates, endorsements, and supporting documentation for this Contract.

The following types of insurance are required for this Contract:

1. **Workers' Compensation:**

   For work to be performed in New York State, Newburgh shall provide and maintain full New York State (NYS listed in item 3a of the policy's Information Page) coverage during the life of this contract for the benefit of such employees as are required to be covered by the New York State Workers' Compensation Law.

If the agreement involves work on or near a shoreline, a U.S. Longshore and Harbor Workers' Compensation Act and/or Jones Act policy as applicable must be provided. Any waiver of this requirement must be approved by the Agency and will only be granted in unique or unusual circumstances.

Evidence of Workers' Compensation and Employers Liability coverage must be provided on one of the following forms specified by the Chairman of the New York State Workers' Compensation Board:

FORM #	FORM TITLE
C-105.2	Certificate of Workers' Compensation Insurance (September 2007, or most current version)
U-26.3	State Insurance Fund Version of the C-105.2 form
SI-12/ GSI-105.2	Certificate of Workers' Compensation Self-Insurance
CE-200	Certificate of Attestation of Exemption (when Contractor meets the requirements.)

All forms are valid for one year from the date the form is signed/stamped, or until policy expiration, whichever is earlier.

Please note that ACORD forms are NOT acceptable proof of New York State Workers' Compensation Insurance coverage.

Additional information can be obtained at the Workers' Compensation website:
http:/www.wcb.ny.gov/content/main/Employers/Employers.jsp

2. **Disability Benefits:**

For work to be performed in New York State, Newburgh shall provide and maintain coverage during the life of this contract for the benefit of such employees as are required to be covered by the New York State Disability Benefits Law. Any waiver of this requirement must be approved by the Department of Environmental Conservation and will only be granted in unique or unusual circumstances.

Evidence of Disability Benefits coverage must be provided on one of the following forms specified by the Chairman of the New York State Workers' Compensation Board:

FORM #	FORM TITLE
DB-120.1	Certificate of Insurance Coverage under the New York State Disability Benefits Law
DB-155	Certificate of Disability Self-Insurance

CE-200	Certificate of Attestation of Exemption (when Contractor meets the requirements.)

All forms are valid for one year from the date the form is signed/stamped, or until policy expiration, whichever is earlier.

Please note that ACORD forms are NOT acceptable proof of New York State Disability Benefits Insurance coverage.

Additional information can be obtained at the Workers' Compensation website: http:/www.wcb.ny.gov/content/main/Employers/Employers.jsp

ARTICLE 11: SEVERABILITY

If any part of this Contract is determined to be invalid, illegal or unenforceable, such determination shall not affect the validity, legality or enforceability of any other part of this Contract, and the remaining parts of this Contract shall be enforced as if the invalid, illegal or unenforceable part were not contained therein.

ARTICLE 12: FORCE MAJEURE

Neither party shall be liable for any failure or delay in the performance of its respective obligations hereunder if and to the extent that such delay or failure is due to a cause or circumstance beyond the reasonable control of such party, including, without limitation, acts of God or the public enemy, expropriation or confiscation of lands or facilities, compliance with any law, order or request of any Federal, State, municipal or local governmental authority, acts of war, rebellion or sabotage or damage resulting therefrom, fires, floods, storms, explosions, accidents, riots, strikes or the delay or failure to perform by any subcontractor by reason of any cause or circumstances beyond the reasonable control of such subcontractor.

ARTICLE 13: COMPLIANCE WITH LAWS

Newburgh agrees to comply with the provisions of the Labor Law and all State and Federal laws, local statutes, ordinances, and regulations that are applicable to the performance of this Contract.

SIGNATURE PAGE
Contract C010219

IN WITNESS WHEREOF, this Contract has been duly executed by the parties hereto on the day and year appearing following their respective signatures.

Agency Certification: "In addition to the acceptance of this Contract, I also certify that original copies of this signature page will be attached to all other exact copies of this Contract."

NEWBURGH SIGNATURE	
By:	
Print Name:	As per Res. No. 204-2016 Michael Ciaravino
Title:	City Manager
Dated:	8/12/16

DEPARTMENT SIGNATURE	
By:	
Print Name:	Nancy W. Kissier
Title:	Director, Div of Mgmt & Budget Svcs
Dated:	8/18/16

ATTORNEY GENERAL SIGNATURE	
Approved as to Form:	APPROVED AS TO FORM NYS ATTORNEY GENERAL AUG 22 2016
Dated:	Benjamin L. Maggi BENJAMIN L. MAGGI ASSISTANT ATTORNEY GENERAL

COMPTROLLER SIGNATURE	
Approved: Thomas P. DiNapoli State Comptroller	APPROVED DEPT. OF AUDIT & CONTROL AUG 31 2016 Mary R. Kiely FOR THE STATE COMPTROLLER
Dated:	

Newburgh Acknowledgement

State of New York)
) ss.:
County of Orange)

On the 15th day of August in the year 2016, before me, the undersigned, a Notary Public in and for said State, personally appeared Michael Ciaravino, personally known to me or proved to me on the basis of satisfactory evidence to be the individual(s) whose name(s) is (are) subscribed to the within instrument and acknowledged to me that he/she/they executed the same in his/her/their capacity(ies), and that by his/her/their signature(s) on the instrument, the individual(s), or the person upon behalf of which the individual(s) acted, executed the instrument.

Jessica Gonzalez Notary Public

JESSICA GONZALEZ
Notary Public, State of New York
Reg. #01GO6183428
Qualified in Orange County
Commission Expires 03/17/2020

STANDARD CLAUSES FOR NYS CONTRACTS

The parties to the attached contract, license, lease, amendment or other agreement of any kind (hereinafter, "the contract" or "this contract") agree to be bound by the following clauses which are hereby made a part of the contract (the word "Contractor" herein refers to any party other than the State, whether a contractor, licenser, licensee, lessor, lessee or any other party):

1. **EXECUTORY CLAUSE.** In accordance with Section 41 of the State Finance Law, the State shall have no liability under this contract to the Contractor or to anyone else beyond funds appropriated and available for this contract.

2. **NON-ASSIGNMENT CLAUSE.** In accordance with Section 138 of the State Finance Law, this contract may not be assigned by the Contractor or its right, title or interest therein assigned, transferred, conveyed, sublet or otherwise disposed of without the State's previous written consent, and attempts to do so are null and void. Notwithstanding the foregoing, such prior written consent of an assignment of a contract let pursuant to Article XI of the State Finance Law may be waived at the discretion of the contracting agency and with the concurrence of the State Comptroller where the original contract was subject to the State Comptroller's approval, where the assignment is due to a reorganization, merger or consolidation of the Contractor's business entity or enterprise. The State retains its right to approve an assignment and to require that any Contractor demonstrate its responsibility to do business with the State. The Contractor may, however, assign its right to receive payments without the State's prior written consent unless this contract concerns Certificates of Participation pursuant to Article 5-A of the State Finance Law.

3. **COMPTROLLER'S APPROVAL.** In accordance with Section 112 of the State Finance Law (or, if this contract is with the State University or City University of New York, Section 355 or Section 6218 of the Education Law), if this contract exceeds $50,000 (or the minimum thresholds agreed to by the Office of the State Comptroller for certain S.U.N.Y. and C.U.N.Y. contracts), or if this is an amendment for any amount to a contract which, as so amended, exceeds said statutory amount, or if, by this contract, the State agrees to give something other than money when the value or reasonably estimated value of such consideration exceeds $10,000, it shall not be valid, effective or binding upon the State until it has been approved by the State Comptroller and filed in his office. Comptroller's approval of contracts let by the Office of General Services is required when such contracts exceed $85,000 (State Finance Law Section 163.6-a). However, such pre-approval shall not be required for any contract established as a centralized contract through the Office of General Services or for a purchase order or other transaction issued under such centralized contract.

4. **WORKERS' COMPENSATION BENEFITS.** In accordance with Section 142 of the State Finance Law, this contract shall be void and of no force and effect unless the Contractor shall provide and maintain coverage during the life of this contract for the benefit of such employees as are required to be covered by the provisions of the Workers' Compensation Law.

5. **NON-DISCRIMINATION REQUIREMENTS.** To the extent required by Article 15 of the Executive Law (also known as the Human Rights Law) and all other State and Federal statutory and constitutional non-discrimination provisions, the Contractor will not discriminate against any employee or applicant for employment because of race, creed, color, sex (including gender identity or expression), national origin, sexual orientation, military status, age, disability, predisposing genetic characteristics, marital status or domestic violence victim status. Furthermore, in accordance with Section 220-e of the Labor Law, if this is a contract for the construction, alteration or repair of any public building or public work or for the manufacture, sale or distribution of materials, equipment or supplies, and to the extent that this contract shall be performed within the State of New York, Contractor agrees that neither it nor its subcontractors shall, by reason of race, creed, color, disability, sex, or national origin: (a) discriminate in hiring against any New York State citizen who is qualified and available to perform the work; or (b) discriminate against or intimidate any employee hired for the performance of work under this contract. If this is a building service contract as defined in Section 230 of the Labor Law, then, in accordance with Section 239 thereof, Contractor agrees that neither it nor its subcontractors shall by reason of race, creed, color, national origin, age, sex or disability: (a) discriminate in hiring against any New York State citizen who is qualified and available to perform the work; or (b) discriminate against or intimidate any employee hired for the performance of work under this contract. Contractor is subject to fines of $50.00 per person per day for any violation of Section 220-e or Section 239 as well as possible termination of this contract and forfeiture of all moneys due hereunder for a second or subsequent violation.

6. **WAGE AND HOURS PROVISIONS.** If this is a public work contract covered by Article 8 of the Labor Law or a building service contract covered by Article 9 thereof, neither Contractor's employees nor the employees of its subcontractors may be required or permitted to work more than the number of hours or days stated in said statutes, except as otherwise provided in the Labor Law and as set forth in prevailing wage and supplement schedules issued by the State Labor Department. Furthermore, Contractor and its subcontractors must pay at least the prevailing wage rate and pay or provide the prevailing supplements, including the premium rates for overtime pay, as determined by the State Labor Department in accordance with the Labor Law. Additionally, effective April 28, 2008, if this is a public work contract covered by Article 8 of the Labor Law, the Contractor understands and agrees that the filing of payrolls in a manner consistent with Subdivision 3-a of Section 220 of the Labor Law shall be a condition precedent to payment by the State of

any State approved sums due and owing for work done upon the project.

7. **NON-COLLUSIVE BIDDING CERTIFICATION.** In accordance with Section 139-d of the State Finance Law, if this contract was awarded based upon the submission of bids, Contractor affirms, under penalty of perjury, that its bid was arrived at independently and without collusion aimed at restricting competition. Contractor further affirms that, at the time Contractor submitted its bid, an authorized and responsible person executed and delivered to the State a non-collusive bidding certification on Contractor's behalf.

8. **INTERNATIONAL BOYCOTT PROHIBITION.** In accordance with Section 220-f of the Labor Law and Section 139-h of the State Finance Law, if this contract exceeds $5,000, the Contractor agrees, as a material condition of the contract, that neither the Contractor nor any substantially owned or affiliated person, firm, partnership or corporation has participated, is participating, or shall participate in an international boycott in violation of the federal Export Administration Act of 1979 (50 USC App. Sections 2401 et seq.) or regulations thereunder. If such Contractor, or any of the aforesaid affiliates of Contractor, is convicted or is otherwise found to have violated said laws or regulations upon the final determination of the United States Commerce Department or any other appropriate agency of the United States subsequent to the contract's execution, such contract, amendment or modification thereto shall be rendered forfeit and void. The Contractor shall so notify the State Comptroller within five (5) business days of such conviction, determination or disposition of appeal (2NYCRR 105.4).

9. **SET-OFF RIGHTS.** The State shall have all of its common law, equitable and statutory rights of set-off. These rights shall include, but not be limited to, the State's option to withhold for the purposes of set-off any moneys due to the Contractor under this contract up to any amounts due and owing to the State with regard to this contract, any other contract with any State department or agency, including any contract for a term commencing prior to the term of this contract, plus any amounts due and owing to the State for any other reason including, without limitation, tax delinquencies, fee delinquencies or monetary penalties relative thereto. The State shall exercise its set-off rights in accordance with normal State practices including, in cases of set-off pursuant to an audit, the finalization of such audit by the State agency, its representatives, or the State Comptroller.

10. **RECORDS.** The Contractor shall establish and maintain complete and accurate books, records, documents, accounts and other evidence directly pertinent to performance under this contract (hereinafter, collectively, "the Records"). The Records must be kept for the balance of the calendar year in which they were made and for six (6) additional years thereafter. The State Comptroller, the Attorney General and any other person or entity authorized to conduct an examination, as well as the agency or agencies involved in this contract, shall have access to the Records during normal business hours at an office of the Contractor within the State of New York or, if no such office is available, at a mutually agreeable and reasonable venue within the State, for the term specified above for the purposes of inspection, auditing and copying. The State shall take reasonable steps to protect from public disclosure any of the Records which are exempt from disclosure under Section 87 of the Public Officers Law (the "Statute") provided that: (i) the Contractor shall timely inform an appropriate State official, in writing, that said records should not be disclosed; and (ii) said records shall be sufficiently identified; and (iii) designation of said records as exempt under the Statute is reasonable. Nothing contained herein shall diminish, or in any way adversely affect, the State's right to discovery in any pending or future litigation.

11. **IDENTIFYING INFORMATION AND PRIVACY NOTIFICATION.** (a) Identification Number(s). Every invoice or New York State Claim for Payment submitted to a New York State agency by a payee, for payment for the sale of goods or services or for transactions (e.g., leases, easements, licenses, etc.) related to real or personal property must include the payee's identification number. The number is any or all of the following: (i) the payee's Federal employer identification number, (ii) the payee's Federal social security number, and/or (iii) the payee's Vendor Identification Number assigned by the Statewide Financial System. Failure to include such number or numbers may delay payment. Where the payee does not have such number or numbers, the payee, on its invoice or Claim for Payment, must give the reason or reasons why the payee does not have such number or numbers.

(b) Privacy Notification. (1) The authority to request the above personal information from a seller of goods or services or a lessor of real or personal property, and the authority to maintain such information, is found in Section 5 of the State Tax Law. Disclosure of this information by the seller or lessor to the State is mandatory. The principal purpose for which the information is collected is to enable the State to identify individuals, businesses and others who have been delinquent in filing tax returns or may have understated their tax liabilities and to generally identify persons affected by the taxes administered by the Commissioner of Taxation and Finance. The information will be used for tax administration purposes and for any other purpose authorized by law. (2) The personal information is requested by the purchasing unit of the agency contracting to purchase the goods or services or lease the real or personal property covered by this contract or lease. The information is maintained in the Statewide Financial System by the Vendor Management Unit within the Bureau of State Expenditures, Office of the State Comptroller, 110 State Street, Albany, New York 12236.

12. **EQUAL EMPLOYMENT OPPORTUNITIES FOR MINORITIES AND WOMEN.** In accordance with Section 312 of the Executive Law and 5 NYCRR 143, if this contract is: (i) a written agreement or purchase order instrument, providing for a total expenditure in excess of $25,000.00,

whereby a contracting agency is committed to expend or does expend funds in return for labor, services, supplies, equipment, materials or any combination of the foregoing, to be performed for, or rendered or furnished to the contracting agency; or (ii) a written agreement in excess of $100,000.00 whereby a contracting agency is committed to expend or does expend funds for the acquisition, construction, demolition, replacement, major repair or renovation of real property and improvements thereon; or (iii) a written agreement in excess of $100,000.00 whereby the owner of a State assisted housing project is committed to expend or does expend funds for the acquisition, construction, demolition, replacement, major repair or renovation of real property and improvements thereon for such project, then the following shall apply and by signing this agreement the Contractor certifies and affirms that it is Contractor's equal employment opportunity policy that:

(a) The Contractor will not discriminate against employees or applicants for employment because of race, creed, color, national origin, sex, age, disability or marital status, shall make and document its conscientious and active efforts to employ and utilize minority group members and women in its work force on State contracts and will undertake or continue existing programs of affirmative action to ensure that minority group members and women are afforded equal employment opportunities without discrimination. Affirmative action shall mean recruitment, employment, job assignment, promotion, upgradings, demotion, transfer, layoff, or termination and rates of pay or other forms of compensation;

(b) at the request of the contracting agency, the Contractor shall request each employment agency, labor union, or authorized representative of workers with which it has a collective bargaining or other agreement or understanding, to furnish a written statement that such employment agency, labor union or representative will not discriminate on the basis of race, creed, color, national origin, sex, age, disability or marital status and that such union or representative will affirmatively cooperate in the implementation of the Contractor's obligations herein; and

(c) the Contractor shall state, in all solicitations or advertisements for employees, that, in the performance of the State contract, all qualified applicants will be afforded equal employment opportunities without discrimination because of race, creed, color, national origin, sex, age, disability or marital status.

Contractor will include the provisions of "a", "b", and "c" above, in every subcontract over $25,000.00 for the construction, demolition, replacement, major repair, renovation, planning or design of real property and improvements thereon (the "Work") except where the Work is for the beneficial use of the Contractor. Section 312 does not apply to: (i) work, goods or services unrelated to this contract; or (ii) employment outside New York State. The State shall consider compliance by a contractor or subcontractor with the requirements of any federal law concerning equal employment opportunity which effectuates the purpose of this section. The contracting agency shall determine whether the imposition of the requirements of the provisions hereof duplicate or conflict with any such federal law and if such duplication or conflict exists, the contracting agency shall waive the applicability of Section 312 to the extent of such duplication or conflict. Contractor will comply with all duly promulgated and lawful rules and regulations of the Department of Economic Development's Division of Minority and Women's Business Development pertaining hereto.

13. CONFLICTING TERMS. In the event of a conflict between the terms of the contract (including any and all attachments thereto and amendments thereof) and the terms of this Appendix A, the terms of this Appendix A shall control.

14. GOVERNING LAW. This contract shall be governed by the laws of the State of New York except where the Federal supremacy clause requires otherwise.

15. LATE PAYMENT. Timeliness of payment and any interest to be paid to Contractor for late payment shall be governed by Article 11-A of the State Finance Law to the extent required by law.

16. NO ARBITRATION. Disputes involving this contract, including the breach or alleged breach thereof, may not be submitted to binding arbitration (except where statutorily authorized), but must, instead, be heard in a court of competent jurisdiction of the State of New York.

17. SERVICE OF PROCESS. In addition to the methods of service allowed by the State Civil Practice Law & Rules ("CPLR"), Contractor hereby consents to service of process upon it by registered or certified mail, return receipt requested. Service hereunder shall be complete upon Contractor's actual receipt of process or upon the State's receipt of the return thereof by the United States Postal Service as refused or undeliverable. Contractor must promptly notify the State, in writing, of each and every change of address to which service of process can be made. Service by the State to the last known address shall be sufficient. Contractor will have thirty (30) calendar days after service hereunder is complete in which to respond.

18. PROHIBITION ON PURCHASE OF TROPICAL HARDWOODS. The Contractor certifies and warrants that all wood products to be used under this contract award will be in accordance with, but not limited to, the specifications and provisions of Section 165 of the State Finance Law, (Use of Tropical Hardwoods) which prohibits purchase and use of tropical hardwoods, unless specifically exempted, by the State or any governmental agency or political subdivision or public benefit corporation. Qualification for an exemption under this law will be the responsibility of the contractor to establish to meet with the approval of the State.

In addition, when any portion of this contract involving the use of woods, whether supply or installation, is to be performed by any subcontractor, the prime Contractor will indicate and certify in the submitted bid proposal that the subcontractor has been informed and is in compliance with specifications and provisions regarding use of tropical hardwoods as detailed in §165 State Finance Law. Any such use must meet with the approval of the State; otherwise, the bid may not be considered responsive. Under bidder certifications, proof of qualification for exemption will be the responsibility of the Contractor to meet with the approval of the State.

19. MACBRIDE FAIR EMPLOYMENT PRINCIPLES. In accordance with the MacBride Fair Employment Principles (Chapter 807 of the Laws of 1992), the Contractor hereby stipulates that the Contractor either (a) has no business operations in Northern Ireland, or (b) shall take lawful steps in good faith to conduct any business operations in Northern Ireland in accordance with the MacBride Fair Employment Principles (as described in Section 165 of the New York State Finance Law), and shall permit independent monitoring of compliance with such principles.

20. OMNIBUS PROCUREMENT ACT OF 1992. It is the policy of New York State to maximize opportunities for the participation of New York State business enterprises, including minority and women-owned business enterprises as bidders, subcontractors and suppliers on its procurement contracts.

Information on the availability of New York State subcontractors and suppliers is available from:

NYS Department of Economic Development
Division for Small Business
Albany, New York 12245
Telephone: 518-292-5100
Fax: 518-292-5884
email: opa@esd.ny.gov

A directory of certified minority and women-owned business enterprises is available from:

NYS Department of Economic Development
Division of Minority and Women's Business Development
633 Third Avenue
New York, NY 10017
212-803-2414
email: mwbecertification@esd.ny.gov
https://ny.newnycontracts.com/FrontEnd/VendorSearchPublic.asp

The Omnibus Procurement Act of 1992 requires that by signing this bid proposal or contract, as applicable, Contractors certify that whenever the total bid amount is greater than $1 million:

(a) The Contractor has made reasonable efforts to encourage the participation of New York State Business Enterprises as suppliers and subcontractors, including certified minority and women-owned business enterprises, on this project, and has retained the documentation of these efforts to be provided upon request to the State;

(b) The Contractor has complied with the Federal Equal Opportunity Act of 1972 (P.L. 92-261), as amended;

(c) The Contractor agrees to make reasonable efforts to provide notification to New York State residents of employment opportunities on this project through listing any such positions with the Job Service Division of the New York State Department of Labor, or providing such notification in such manner as is consistent with existing collective bargaining contracts or agreements. The Contractor agrees to document these efforts and to provide said documentation to the State upon request; and

(d) The Contractor acknowledges notice that the State may seek to obtain offset credits from foreign countries as a result of this contract and agrees to cooperate with the State in these efforts.

21. RECIPROCITY AND SANCTIONS PROVISIONS. Bidders are hereby notified that if their principal place of business is located in a country, nation, province, state or political subdivision that penalizes New York State vendors, and if the goods or services they offer will be substantially produced or performed outside New York State, the Omnibus Procurement Act 1994 and 2000 amendments (Chapter 684 and Chapter 383, respectively) require that they be denied contracts which they would otherwise obtain. NOTE: As of May 15, 2002, the list of discriminatory jurisdictions subject to this provision includes the states of South Carolina, Alaska, West Virginia, Wyoming, Louisiana and Hawaii. Contact NYS Department of Economic Development for a current list of jurisdictions subject to this provision.

22. COMPLIANCE WITH NEW YORK STATE INFORMATION SECURITY BREACH AND NOTIFICATION ACT. Contractor shall comply with the provisions of the New York State Information Security Breach and Notification Act (General Business Law Section 899-aa; State Technology Law Section 208).

23. COMPLIANCE WITH CONSULTANT DISCLOSURE LAW. If this is a contract for consulting services, defined for purposes of this requirement to include analysis, evaluation, research, training, data processing, computer programming, engineering, environmental, health, and mental health services, accounting, auditing, paralegal, legal or similar services, then, in accordance with Section 163 (4-g) of the State Finance Law (as amended by Chapter 10 of the Laws of 2006), the Contractor shall timely, accurately and properly comply with the requirement to submit an annual employment report for the contract to the agency that awarded

the contract, the Department of Civil Service and the State Comptroller.

24. **PROCUREMENT LOBBYING.** To the extent this agreement is a "procurement contract" as defined by State Finance Law Sections 139-j and 139-k, by signing this agreement the contractor certifies and affirms that all disclosures made in accordance with State Finance Law Sections 139-j and 139-k are complete, true and accurate. In the event such certification is found to be intentionally false or intentionally incomplete, the State may terminate the agreement by providing written notification to the Contractor in accordance with the terms of the agreement.

25. **CERTIFICATION OF REGISTRATION TO COLLECT SALES AND COMPENSATING USE TAX BY CERTAIN STATE CONTRACTORS, AFFILIATES AND SUBCONTRACTORS.**
To the extent this agreement is a contract as defined by Tax Law Section 5-a, if the contractor fails to make the certification required by Tax Law Section 5-a or if during the term of the contract, the Department of Taxation and Finance or the covered agency, as defined by Tax Law 5-a, discovers that the certification, made under penalty of perjury, is false, then such failure to file or false certification shall be a material breach of this contract and this contract may be terminated, by providing written notification to the Contractor in accordance with the terms of the agreement, if the covered agency determines that such action is in the best interest of the State.

26. **IRAN DIVESTMENT ACT**. By entering into this Agreement, Contractor certifies in accordance with State Finance Law §165-a that it is not on the "Entities Determined to be Non-Responsive Bidders/Offerers pursuant to the New York State Iran Divestment Act of 2012" ("Prohibited Entities List") posted at:
http://www.ogs.ny.gov/about/regs/docs/ListofEntities.pdf

Contractor further certifies that it will not utilize on this Contract any subcontractor that is identified on the Prohibited Entities List. Contractor agrees that should it seek to renew or extend this Contract, it must provide the same certification at the time the Contract is renewed or extended. Contractor also agrees that any proposed Assignee of this Contract will be required to certify that it is not on the Prohibited Entities List before the contract assignment will be approved by the State.

During the term of the Contract, should the state agency receive information that a person (as defined in State Finance Law §165-a) is in violation of the above-referenced certifications, the state agency will review such information and offer the person an opportunity to respond. If the person fails to demonstrate that it has ceased its engagement in the investment activity which is in violation of the Act within 90 days after the determination of such violation, then the state agency shall take such action as may be appropriate and provided for by law, rule, or contract, including, but not limited to, imposing sanctions, seeking compliance, recovering damages, or declaring the Contractor in default.

The state agency reserves the right to reject any bid, request for assignment, renewal or extension for an entity that appears on the Prohibited Entities List prior to the award, assignment, renewal or extension of a contract, and to pursue a responsibility review with respect to any entity that is awarded a contract and appears on the Prohibited Entities list after contract award.

APPENDIX B

Standard Clauses for All New York State Department of Environmental Conservation Contracts

The parties to the attached contract, license, lease, grant, amendment or other agreement of any kind (hereinafter "the contract" or "this contract") agree to be bound by the following clauses which are hereby made a part of the contract. The word "Contractor" herein refers to any party to the contract, other than the New York State Department of Environmental Conservation (hereinafter "Department").

I. **Postponement, suspension, abandonment or termination by the Department:**
The Department shall have the right to postpone, suspend, abandon or terminate this contract, and such actions shall in no event be deemed a breach of contract. In the event of any termination, postponement, delay, suspension or abandonment, the Contractor shall immediately stop work, take steps to incur no additional obligations, and to limit further expenditures. Within 15 days of receipt of notice, the Contractor shall deliver to the Department all data, reports, plans, or other documentation related to the performance of this contract, including but not limited to source codes and specifications, guarantees, warranties, as-built plans and shop drawings. In any of these events, the Department shall make settlement with the Contractor upon an equitable basis as determined by the Department which shall fix the value of the work which was performed by the Contractor prior to the postponement, suspension, abandonment or termination of this contract. This clause shall not apply to this contract if the contract contains other provisions applicable to postponement, suspension or termination of the contract.

II. **Indemnification and Hold harmless** The Contractor agrees that it will indemnify and save harmless the Department and the State of New York from and against all losses from claims, demands, payments, suits, actions, recoveries and judgments of every nature and description brought or recovered against it by reason of any omission or tortious act of the Contractor, its agents, employees, suppliers or subcontractors in the performance of this contract. The Department and the State of New York may retain such monies from the amount due Contractor as may be necessary to satisfy any claim for damages, costs and the like, which is asserted against the Department and/or the State of New York.

III. **Conflict of Interest**
(a) Organizational Conflict of Interest. To the best of the Contractor's knowledge and belief, the Contractor warrants that there are no relevant facts or circumstances which could give rise to an organizational conflict of interest, as herein defined, or that the Contractor has disclosed all such relevant information to the Department.

(1) An organizational conflict of interest exists when the nature of the work to be performed under this contract may, without some restriction on future activities, impair or appear to impair the Contractor's objectivity in performing the work for the Department.

(2) The Contractor agrees that if an actual, or potential organizational conflict of interest is discovered at any time after award, whether before or during performance, the Contractor will immediately make a full disclosure in writing to the Department. This disclosure shall include a description of actions which the Contractor has taken or proposes to take, after consultation with the Department, to avoid, mitigate, or minimize the actual or potential conflict.

(3) To the extent that the work under this contract requires access to personal, proprietary or confidential business or financial data of persons or other companies, and as long as such data remains proprietary or confidential, the Contractor shall protect such data from unauthorized use and disclosure and agrees not to use it to compete with such companies.

(b) Personal Conflict of Interest: The following provisions with regard to management or professional level employee personnel performing under this contract shall apply until the earlier of the termination date of the affected employee(s) or the duration of the contract.

(1) A personal conflict of interest is defined as a relationship of an employee, subcontractor employee, or consultant with an entity that may impair or appear to impair the objectivity of the employee, subcontractor employee, or consultant in performing the contract work. The Contractor agrees to notify the Department immediately of any actual or potential personal conflict of interest with regard to any such person working on or having access to information regarding this contract, as soon as Contractor becomes aware of such conflict. The Department will notify the Contractor of the appropriate action to be taken.

(2) The Contractor agrees to advise all management or professional level employees involved in the work of this contract, that they must report any personal conflicts of interest to the Contractor. The Contractor must then advise the Department which will advise the Contractor of the appropriate action to be taken.

(3) Unless waived by the Department, the Contractor shall certify annually that, to the best of the Contractor's knowledge and belief, all actual, apparent or potential conflicts of interest, both personal and organizational, as defined herein, have been reported to the Department. Such certification must be signed by a senior executive of the Contractor and submitted in accordance with instructions provided by the Department. Along with the annual certification, the Contractor shall also submit an update of any changes in any conflict of interest plan submitted with its proposal for this contract. The initial certification shall cover the one-year period from the date of contract award, and all subsequent certifications shall cover successive annual periods thereafter. The certification is to be submitted no later than 45 days after the close of the previous certification period covered.

(4) In performing this contract, the Contractor recognizes that its employees may have access to data, either provided by the Department or first generated during contract performance, of a sensitive nature which should not be released without Department approval. If this situation occurs, the Contractor agrees to obtain confidentiality agreements from all affected employees working on requirements under this contract including subcontractors and consultants. Such agreements shall contain provisions which stipulate that each employee agrees not to disclose, either in whole or in part, to any entity external to the Department, Department of Health or the New York State Department of Law, any information or data provided by the Department or first generated by the Contractor under this contract, any site-specific cost information, or any enforcement strategy without first obtaining the written permission of the Department. If a Contractor, through an employee or otherwise, is subpoenaed to testify or produce documents, which could result in such disclosure, the Contractor must provide immediate advance notification to the Department so that the Department can authorize such disclosure or have the opportunity to take action to prevent such disclosure. Such agreements shall be effective for the life of the contract and for a period of five (5) years after completion of the contract.

(c) Remedies - The Department may terminate this contract in whole or in part, if it deems such termination necessary to avoid an organizational or personal conflict of interest, or an unauthorized disclosure of information. If the Contractor fails to make required disclosures or misrepresents relevant information to the Department, the Department may terminate the contract, or pursue such other remedies as may be permitted by the terms of Clause I of this Appendix or other applicable provisions of this contract regarding termination.

(d) The Contractor will be ineligible to make a proposal or bid on a contract for which the Contractor has developed the statement of work or the solicitation package

(e) The Contractor agrees to insert in each subcontract or consultant agreement placed hereunder (except for subcontracts or consultant agreements for well drilling, fence erecting, plumbing, utility hookups, security guard services, or electrical services) provisions which shall conform substantially to the language of this clause, including this paragraph (e), unless otherwise authorized by the Department.

If this is a contract for work related to action at an inactive hazardous waste site, the following paragraph shall apply to those Contractors whose work requires the application of professional judgment: It does not apply to construction contracts.

(f) Due to the scope and nature of this contract, the Contractor shall observe the following restrictions on future hazardous waste site contracting for the duration of the contract.

(1) The Contractor, during the life of the work assignment and for a period of three (3) years after the completion of the work assignment, agrees not to enter into a contract with or to represent any party with respect to any work relating to remedial activities or work pertaining to a site where the Contractor previously performed work for the Department under this contract without the prior written approval of the Department.

(2) The Contractor agrees in advance that if any bids/proposals are submitted for any work for a third party that would require written approval of the Department prior to entering into a contract because of the restrictions of this clause, then the bids/proposals are submitted at the Contractor's own risk, and no claim shall be made against the Department to recover bid/proposal costs as a direct cost whether the request for authorization to enter into the contract is denied or approved.

IV. **Requests for Payment** All requests for payment by the Contractor must be submitted on forms supplied and approved by the Department. Each payment request must contain such items of information and supporting documentation as are required by the Department, and shall be all-inclusive for the period of time covered by the payment request.

V. **Compliance with Federal requirements** To the extent that federal funds are provided to the Contractor or used in paying the Contractor under this contract, the Contractor agrees that it will comply with all applicable federal laws and regulations, including but not limited to those laws and regulations under which the Federal funds were authorized. The Contractor further agrees to insert in any subcontract hereunder, provisions which shall conform substantially to the language of this clause.

VI. **Independent Contractor** The Contractor shall have the status of an independent contractor. Accordingly, the Contractor agrees that it will conduct itself in a manner consistent with such status, and that it will neither hold itself out as, nor claim to be, an officer or employee of the Department by reason of this contract. It further agrees that it will not make any claim, demand or application to the Department for any right or privilege applicable to an officer or employee of the Department, including but not limited to worker's compensation coverage, unemployment insurance benefits, social security coverage, or retirement membership or credit.

VII. **Compliance with applicable laws**

(a) Prior to the commencement of any work under this contract, the Contractor is required to meet all legal requirements necessary in the performance of the contract. This includes but is not limited to compliance with all applicable federal, state and local laws and regulations promulgated thereunder. It is the Contractor's responsibility to obtain any necessary permits, or other authorizations. By signing this contract, the Contractor affirmatively represents that it has complied with said laws, unless it advises the Department otherwise, in writing. The Department signs this contract in reliance upon this representation.

(b) During the term of this contract, and any extensions thereof, the Contractor must remain in compliance with said laws. A failure to notify the Department of noncompliance of which the Contractor was or should have been aware, may be considered a material breach of this contract.

VIII. **Dispute Resolution** The parties agree to the following steps, or as many as are necessary to resolve disputes between the Department and the Contractor.

(a) The Contractor specifically agrees to submit, in the first instance, any dispute relating to this contract to the designated individual, who shall render a written decision and furnish a copy thereof to the Contractor.

(1) The Contractor must request such decision in writing no more than fifteen days after it knew or should have known of the facts which are the basis of the dispute.

(2) The decision of the designated individual shall be the final DEC determination, unless the Contractor files a written appeal of that decision with the designated appeal individual ("DAI") within twenty days of receipt of that decision.

(b) Upon receipt of the written appeal, the DAI, will review the record and decision. Following divisional procedures in effect at that time, the DAI will take one of the following actions, with written notice to the Contractor.

(1) Remand the matter to the program staff for further negotiation or information if it is determined that the matter is not ripe for review; or
(2) Determine that there is no need for further action, and that the determination of the designated individual is confirmed; or
(3) Make a determination on the record as it exists.

(c) The decision of the DAI shall be the final DEC decision unless the Contractor files a written appeal of that decision with the Chair of the Contract Review Committee ("CRC") within twenty days of receipt of that decision.

The designated individual to hear disputes is:

Laura Zeppetelli, Bureau Director
(Name and Title)
NYS Dept of Environmental Conservation - Remediation
625 Broadway, 12th Fl, Albany, NY 12233-7012
(Address)
(518) 402-9764
(Telephone)

The designated appeal individual to review decisions is:

Michael Ryan, Asst. Division Director
(Name and Title)
NYS Dept of Environmental Conservation - Remediation
625 Broadway, 12th Fl, Albany, NY 12233-7011
(Address)
(518) 402-9706
(Telephone)

The Chair of the Contract Review Committee is:

Department of Environmental Conservation
Nancy W. Lussier Chair
Contract Review Committee
625 Broadway, 10th Floor
Albany, NY 12233-5010
Telephone: (518) 402-9228

(d) Upon receipt of the written appeal, the Chair of the CRC, in consultation with the members of the CRC and the Office of General Counsel, will take one of the following actions, or a combination thereof, with written notice to the Contractor.

(1) Remand the matter to program staff for additional fact finding, negotiation, or other appropriate action; or

(2) Adopt the decision of the DAI; or

(3) Consider the matter for review by the CRC in accordance with its procedures.

(e) Following a decision to proceed pursuant to (d) 3, above, the Chair of the CRC shall convene a proceeding in accordance with the CRC's established contract dispute resolution guidelines. The proceeding will provide the Contractor with an opportunity to be heard.

(f) Following a decision pursuant to (d) 2 or (d) 3, the CRC shall make a written recommendation to the Assistant Commissioner for Administration who shall render the final DEC determination.

(g) At any time during the dispute resolution process, and upon mutual agreement of the parties, the Office of Hearings and Mediation Services (OHMS) may be requested to provide mediation services or other appropriate means to assist in resolving the dispute. Any findings or recommendations made by the OHMS will not be binding on either party.

(h) Final DEC determinations shall be subject to review only pursuant to Article 78 of the Civil Practice Law and Rules.

(i) Pending final determination of a dispute hereunder, the Contractor shall proceed diligently with the performance of the Contract in accordance with the decision of the designated individual. Nothing in this Contract shall be construed as making final the decision of any administrative officer upon a question of law.

(j) Notwithstanding the foregoing, at the option of the Contractor, the following shall be subject to review by the CRC: Disputes arising under Article 15-A of the Executive Law (Minority and Women Owned Business participation), the Department's determination with respect to the adequacy of the Contractor's Utilization Plan, or the Contractor's showing of good faith efforts to comply therewith. A request for a review before the CRC should be made, in writing, within twenty days of receipt of the Department's determination.

(k) The CRC will promptly convene a review in accordance with Article 15-A of the Executive Law and the regulations promulgated thereunder.

IX. Labor Law Provisions

(a) When applicable, the Contractor shall post, in a location designated by the Department, a copy of the New York State Department of Labor schedules of prevailing wages and supplements for this project, a copy of all re-determinations of such schedules for the project, the Workers' Compensation Law Section 51 notice, all other notices required by law to be posted at the site, the Department of Labor notice that this project is a public work project on which each worker is entitled to receive the prevailing wages and supplements for their occupation, and all other notices which the Department directs the Contractor to post. The Contractor shall provide a surface for such notices which is satisfactory to the Department. The Contractor shall maintain such notices in a legible manner and shall replace any notice or schedule which is damaged, defaced, illegible or removed for any reason. Contractor shall post such notices before commencing any work on the site and shall maintain such notices until all work on the site is complete.

(b) When appropriate, contractor shall distribute to each worker for this Contract a notice, in a form provided by the Department, that this project is a public work project on which each worker is entitled to receive the prevailing wage and supplements for the occupation at which he or she is working. Worker includes employees of Contractor and all Subcontractors and all employees of suppliers entering the site. Such notice shall be distributed to each worker before they start performing any work of this contract. At the time of distribution, Contractor shall have each worker sign a statement, in a form provided by the Department, certifying that the worker has received the notice required by this section, which signed statement shall be maintained with the payroll records required by the following paragraph (c).

(c) Contractor shall maintain on the site the original certified payrolls or certified transcripts thereof which Contractor and all of its Subcontractors are required to maintain pursuant to the New York Labor Law Section 220. Contractor shall maintain with the payrolls or transcripts thereof, the statements signed by each worker pursuant to paragraph (b).

(d) Within thirty days of issuance of the first payroll, and every thirty days thereafter, the Contractor and every subcontractor must submit a transcript of the original payroll to the Department, which transcript must be subscribed and affirmed as true under penalty of perjury.

X. **Offset** In accordance with State Law, the Department has the authority to administratively offset any monies due it from the Contractor, from payments due to the Contractor under this contract. The Department may also (a) assess interest or late payment charges, and collection fees, if applicable; (b) charge a fee for any dishonored check; (c) refuse to renew certain licenses and permits.

XI. **Tax Exemption** Pursuant to Tax Law Section 1116, the State is exempt from sales and use taxes. A standard state voucher is sufficient evidence thereof. For federal excise taxes, New York's registration Number 14740026K covers tax-free transactions under the Internal Revenue Code.

XII. **Litigation Support** In the event that the Department becomes involved in litigation related to the subject matter of this contract, the Contractor agrees to provide background support and other litigation support, including but not limited to depositions, appearances, and testimony. Compensation will be negotiated and based on rates established in the contract, or as may otherwise be provided in the contract.

XIII **Equipment** Any equipment purchased with funds provided under this contract, shall remain the property of the Department, unless otherwise provided in the contract. The Contractor shall be liable for all costs for maintaining the property in good, usable condition. It shall be returned to the Department upon completion of the contract, in such condition, unless the Department elects to sell the equipment to the Contractor, upon mutually agreeable terms.

XIV. **Inventions or Discoveries** Any invention or discovery first made in performance of this Contract shall be the property of the Department, unless otherwise provided in the contract. The Contractor agrees to provide the Department with any and all materials related to this property. At the Department's option, the Contractor may be granted a non-exclusive license.

XV. **Patent and Copyright Protection**
If any patented or copyrighted material is involved in or results from the performance of this Contract, this Article shall apply.

(a) The Contractor shall, at its expense, defend any suit instituted against the Department and indemnify the Department against any award of damages and costs made against the Department by a final judgment of a court of last resort based on the claim that any of the products, services or consumable supplies furnished by the Contractor under this Contract infringes any patent, copyright or other proprietary right; provided the Department gives the Contractor:

(1) prompt written notice of any action, claim or threat of infringement suit, or other suit, and

(2) the opportunity to take over, settle or defend such action at the Contractor's sole expense, and

(3) all available information, assistance and authority necessary to the action, at the Contractor's sole expense.

(4) The Contractor shall control the defense of any such suit, including appeals, and all negotiations to effect settlement, but shall keep the Department fully informed concerning the progress of the litigation.

(b) If the use of any item(s) or parts thereof is held to infringe a patent or copyright and its use is enjoined, or Contractor believes it will be enjoined, the Contractor shall have the right, at its election and expense to take action in the following order of precedence:

(1) procure for the Department the right to continue using the same item or parts thereof;

(2) modify the same so that it becomes non-infringing and of at least the same quality and performance;

(3) replace the item(s) or parts thereof with noninfringing items of at least the same quality and performance;

(4) if none of the above remedies are available, discontinue its use and eliminate any future charges or royalties pertaining thereto. The Contractor will buy back the infringing product(s) at the State's book value, or in the event of a lease, the parties shall terminate the lease. If discontinuation or elimination results in the Contractor not being able to perform the Contract, the Contract shall be terminated.

(c) In the event that an action at law or in equity is commenced against the Department arising out of a claim that the Department's use of any item or material pursuant to or resulting from this Contract infringes any patent, copyright or proprietary right, and such action is forwarded by the Department to the Contractor for defense and indemnification pursuant to this Article, the Department shall copy all pleadings and documents forwarded to the Contractor together with the forwarding correspondence and a copy of this Contract to the Office of the Attorney General of the State of New York. If upon receipt of such request for defense, or at any time thereafter, the Contractor is of the opinion that the allegations in such action, in whole or in part, are not covered by the indemnification set forth in this Article, the Contractor shall immediately notify the Department and the Office of the Attorney General of the State of New York in writing and shall specify to what

extent the Contractor believes it is and is not obligated to defend and indemnify under the terms and conditions of this Contract. The Contractor shall in such event protect the interests of the Department and State of New York and secure a continuance to permit the State of New York to appear and defend its interests in cooperation with Contractor as is appropriate, including any jurisdictional defenses which the Department and State shall have.

(d) The Contractor shall, however, have no liability to the Department under this Article if any infringement is based upon or arises out of: (1) compliance with designs, plans, or specifications furnished by or on behalf of the Department as to the items; (2) alterations of the items by the Department; (3) failure of the Department to use updated items provided by the Contractor for avoiding infringement; (4) use of items in combination with apparatus or devices not delivered by the Contractor; (5) use of items in a manner for which the same were neither designed nor contemplated; or (6) a patent or copyright in which the Department or any affiliate or subsidiary of the Department has any direct or indirect interest by license or otherwise.

(e) The foregoing states the Contractor's entire liability for, or resulting from, patent or copyright infringement or claim thereof.

XVI. **Force Majeure** The term Force Majeure shall include acts of God, work stoppages due to labor disputes or strikes, fires, explosions, epidemics, riots, war rebellion, sabotage or the like. If a failure of or delay in performance by either party results from the occurrence of a Force Majeure event, the delay shall be excused and the time for performance extended by a period equivalent to the time lost because of the Force majeure event, if and to the extent that:

(a) The delay or failure was beyond the control of the party affected and not due to its fault or negligence; and

(b) The delay or failure was not extended because of the affected party's failure to use all reasonable diligence to overcome the obstacle or to resume performance immediately after such obstacle was overcome; and

(c) The affected party provides notice within (5) days of the onset of the event, that it is invoking the protection of this provision.

XVII. **Freedom of Information Requests** The Contractor agrees to provide the Department with any records which must be released in order to comply with a request pursuant to the Freedom of Information Law. The Department will provide the contractor with an opportunity to identify material which may be protected from release and to support its position.

XVIII. **Precedence** In the event of a conflict between the terms of this Appendix B and the terms of the Contract (including any and all attachments thereto and amendments thereof, but not including Appendix A), the terms of this Appendix B shall control. In the event of a conflict between the terms of this Appendix B, and the terms of Appendix A, the terms of Appendix A shall control.

XIX. **Article 15-Requirements**

PARTICIPATION BY MINORITY GROUP MEMBERS AND WOMEN WITH RESPECT TO STATE CONTRACTS: REQUIREMENTS AND PROCEDURES

(a) General Provisions

(1)The Department is required to implement the provisions of New York State Executive Law Article 15-A and 5 NYCRR Parts 142-144 ("MWBE Regulations") for all State contracts as defined therein, with a value (1) in excess of $25,000 for labor, services, equipment, materials, or any combination of the foregoing or (2) in excess of $100,000 for real property renovations and construction.

(2)The Contractor to the subject contract (the "Contractor" and the "Contract," respectively) agrees, in addition to any other nondiscrimination provision of the Contract and at no additional cost to the New York State Department (the "Department", to fully comply and cooperate with the Department in the implementation of New York State Executive Law Article 15-A. These requirements include equal employment opportunities for minority group members and women ("EEO") and contracting opportunities for certified minority and women-owned business enterprises ("MWBEs"). Contractor's demonstration of "good faith efforts" pursuant to 5 NYCRR §142.8 shall be a part of these requirements. These provisions shall be deemed supplementary to, and not in lieu of, the nondiscrimination provisions required by New York State Executive Law Article 15 (the "Human Rights Law") or other applicable federal, state or local laws.

(3)Failure to comply with all of the requirements herein may result in a finding of non-responsiveness, non-responsibility and/or a breach of contract, leading to the withholding of funds or such other actions, liquidated damages pursuant to Section VII of this Article or enforcement proceedings as allowed by the Contract.

(b) Contract Goals

(1)For purposes of this procurement, the Department hereby establishes an overall goal of 0% for Minority and Women-Owned Business Enterprises ("MWBE") participation (based on the current availability of qualified MBEs and WBEs).

(2)For purposes of providing meaningful participation by MWBEs on the Contract and achieving the Contract Goals established in Section II-A hereof, Contractor should reference the directory of New York State Certified MWBEs found at the following internet address;

https://ny.newnycontracts.com

Additionally, the Contractor is encouraged to contact the Division of Minority and Woman Business Development ((518) 292-5250; (212) 803-2414; or (716) 846-8200) to discuss additional methods of maximizing participation by MWBEs on the Contract.

(3)Where MWBE goals have been established herein, pursuant to 5 NYCRR §142.8, Contractor must document "good faith efforts" to provide meaningful participation by MWBEs as subcontractors or suppliers in the performance of the Contract. In accordance with Section 316-a of Article 15-A and 5 NYCRR §142.13, the Contractor acknowledges that if Contractor is found to have willfully and intentionally failed to comply with the MWBE participation goals set forth in the Contract, such a finding constitutes a breach of contract and the Contractor shall be liable to the Department for liquidated or other appropriate damages, as set forth herein.

(c) Equal Employment Opportunity (EEO)

(1) Contractor agrees to be bound by the provisions of Article 15-A and the MWBE Regulations promulgated by the Division of Minority and Women's Business Development of the Department of Economic Development (the "Division"). If any of these terms or provisions conflict with applicable law or regulations, such laws and regulations shall supersede these requirements. Contractor shall comply with the following provisions of Article 15-A:

(i)Contractor and Subcontractors shall undertake or continue existing EEO programs to ensure that minority group members and women are afforded equal employment opportunities without discrimination because of race, creed, color, national origin, sex, age, disability or marital status. For these purposes, EEO shall apply in the areas of recruitment, employment, job assignment, promotion, upgrading, demotion, transfer, layoff, or termination and rates of pay or other forms of compensation.

(ii) Contractor shall submit an EEO policy statement to the Department within seventy two (72) hours after the date of the notice by Department to award the Contract to the Contractor.

(iii)If Contractor or Subcontractor does not have an existing EEO policy statement, the Department may provide the Contractor or Subcontractor a model statement. This statement can be found at the link provided in Section 8.

(iv) The Contractor's EEO policy statement shall include the following language:

a. The Contractor will not discriminate against any employee or applicant for employment because of race, creed, color, national origin, sex, age, disability or marital status, will undertake or continue existing EEO programs to ensure that minority group members and women are afforded equal employment opportunities without discrimination, and shall make and document its conscientious and active efforts to employ and utilize minority group members and women in its work force.

b. The Contractor shall state in all solicitations or advertisements for employees that, in the performance of the contract, all qualified applicants will be afforded equal employment opportunities without discrimination because of race, creed, color, national origin, sex, age, disability or marital status.

c. The Contractor shall request each employer Department, labor union, or authorized representative of workers with which it has a collective bargaining or other agreement or understanding, to furnish a written statement that such employer Department, labor union, or representative will not discriminate on the basis of race, creed, color, national origin, sex age, disability or marital status and that such union or representative will affirmatively cooperate in the

implementation of the Contractor's obligations herein.

d. The Contractor will include the provisions of Subdivisions (a) through (c) of this Subsection 4 and Paragraph "E" of this Section III, which provides for relevant provisions of the Human Rights Law, in every subcontract in such a manner that the requirements of the subdivisions will be binding upon each subcontractor as to work in connection with the Contract.

e. **EEO Contract Goals** for the purposes of this procurement, the Department hereby establishes a goal of **10%** Minority Labor Force Participation, **10%** Female Labor Force Participation.

(2) Staffing Plan Form

To ensure compliance with this Section, the Contractor shall submit a staffing plan to document the composition of the proposed workforce to be utilized in the performance of the Contract by the specified categories listed, including ethnic background, gender, and Federal occupational categories. Contractors shall complete the Staffing plan form and submit it as part of their bid or proposal or within a reasonable time, but no later than the time of award of the contract.

(3) Workforce Employment Utilization Report Form ("Workforce Report")

(i) Once a contract has been awarded and during the term of Contract, Contractor is responsible for updating and providing notice to the Department of any changes to the previously submitted Staffing Plan. This information is to be submitted on a quarterly basis during the term of the Contract to report the actual workforce utilized in the performance of the Contract by the specified categories listed including ethnic background, gender, and Federal occupational categories. The Workforce Report must be submitted to report this information.

(ii) Separate forms shall be completed by Contractor and any subcontractor performing work on the Contract.

(iii) In limited instances, Contractor may not be able to separate out the workforce utilized in the performance of the Contract from Contractor's and/or subcontractor's total workforce. When a separation can be made, Contractor shall submit the Workforce Report and indicate that the information provided related to the actual workforce utilized on the Contract. When the workforce to be utilized on the contract cannot be separated out from Contractor's and/or subcontractor's total workforce, Contractor shall submit the Workforce Report and indicate that the information provided is Contractor's total workforce during the subject time frame, not limited to work specifically under the Contract.

(2) Contractor shall comply with the provisions of the Human Rights Law, all other State and Federal statutory and constitutional non-discrimination provisions. Contractor and subcontractors shall not discriminate against any employee or applicant for employment because of race, creed (religion), color, sex, national origin, sexual orientation, military status, age, disability, predisposing genetic characteristic, marital status or domestic violence victim status, and shall also follow the requirements of the Human Rights Law with regard to non-discrimination on the basis of prior criminal conviction and prior arrest.

(d) MWBE Utilization Plan

(1) The Contractor represents and warrants that Contractor has submitted an MWBE Utilization Plan either prior to, or at the time of, the execution of the contract.

(2) Contractor agrees to use such MWBE Utilization Plan for the performance of MWBEs on the Contract pursuant to the prescribed MWBE goals set forth in Section III-A of this Appendix.

(3)ontractor further agrees that a failure to submit and/or use such MWBE Utilization Plan shall constitute a material breach of the terms of the Contract. Upon the occurrence of such a material breach, Department shall be entitled to any remedy provided herein, including but not limited to, a finding of Contractor non-responsiveness.

(e) Waivers

(1)For Waiver Requests Contractor should use Waiver Request Form.

(2)If the Contractor, after making good faith efforts, is unable to comply with MWBE goals, the Contractor may submit a Request for Waiver form documenting good faith efforts by the Contractor to meet such goals. If the documentation included with the waiver request is complete, the Department shall evaluate the request and issue a written notice of acceptance or denial within twenty (20) days of receipt.

(4) If the Department, upon review of the MWBE Utilization Plan and updated Quarterly MWBE Contractor Compliance Reports determines that Contractor is failing or refusing to comply with the Contract goals and no waiver has been issued in regards to such non-compliance, the Department may issue a notice of deficiency to the Contractor. The Contractor must respond to the notice of deficiency within seven (7) business days of receipt. Such response may include a request for partial or total waiver of MWBE Contract Goals.

(f) Quarterly MWBE Contractor Compliance Report

Contractor is required to submit a Quarterly MWBE Contractor Compliance Report Form to the Department by the 10th day following each end of quarter over the term of the Contract documenting the progress made towards achievement of the MWBE goals of the Contract.

(g) Liquidated Damages - MWBE Participation

(1)Where Department determines that Contractor is not in compliance with the requirements of the Contract and Contractor refuses to comply with such requirements, or if Contractor is found to have willfully and intentionally failed to comply with the MWBE participation goals, Contractor shall be obligated to pay to the Department liquidated damages.

(2) Such liquidated damages shall be calculated as an amount equaling the difference between:

(i) All sums identified for payment to MWBEs had the Contractor achieved the contractual MWBE goals; and

(ii) All sums actually paid to MWBEs for work performed or materials supplied under the Contract.

(3) In the event a determination has been made which requires the payment of liquidated damages and such identified sums have not been withheld by the Department, Contractor shall pay such liquidated damages to the Department within sixty (60) days after they are assessed by the Department unless prior to the expiration of such sixtieth day, the Contractor has filed a complaint with the Director of the Division of Minority and Woman Business Development pursuant to Subdivision 8 of Section 313 of the Executive Law in which event the liquidated damages shall be payable if Director renders a decision in favor of the Department.

(h) Forms

The following forms referenced in Article XVIII 3-A-3, 3B, 3C and 5A can be found at http://www.dec.ny.gov/about/48854.html

RESOLUTION NO.: 327 - 2017

OF

NOVEMBER 27, 2017

RESOLUTION AMENDING RESOLUTION NO. 310A-2016, THE 2017 BUDGET FOR THE CITY OF NEWBURGH, NEW YORK TO TRANSFER $571.43 FROM LEGISLATIVE BODY-TRAVEL AND CONFERENCE AND $157.14 FROM LEGISLATIVE BODY-EDUCATION TO THE HUMAN RIGHTS COMMISSION

WHEREAS, Councilwoman Karen Mejia proposes to transfer her allocation from the Legislative budget in the amount of $728.57 to the Human Rights Commission to facilitate training and education; and

WHEREAS, this Council finds that the transfer of funds and 2017 budget amendment is in the best interests of the City of Newburgh;

NOW, THEREFORE, BE IT RESOLVED, by the City Council of the City of Newburgh that Resolution No. 310A-2016, the 2017 Budget of the City of Newburgh, is hereby amended as follows:

		Decrease	Increase
A.1010.0461	Legislative Body-Travel & Conference	$571.43	
A.1010.0464	Legislative Body-Education	$157.14	
TE.8040.0400-	Human Rights Commission Expense		$728.57
	TOTALS:	$728.57	$728.57

RESOLUTION NO.: _____ - 2017

OF

NOVEMBER 27, 2017

A RESOLUTION AUTHORIZING THE CITY MANAGER TO ENTER INTO A LICENSE AGREEMENT WITH SCENIC HUDSON, INC. TO ALLOW ACCESS TO CITY-OWNED PROPERTY AROUND CRYSTAL LAKE FOR TRAIL MPROVEMENTS

WHEREAS, Scenic Hudson, Inc. has requested access to City-owned property around Crystal Lake for the purpose of making improvements thereto, including but not limited to the construction of a hiking trail, vehicle parking improvements and the installation of a trail head kiosk and related work at no cost to the City of Newburgh; and

WHEREAS, Crystal Lake is currently underutilized and the City Council of the City of Newburgh finds that permitting such access for the purpose of making such improvements around Crystal Lake is in the best interests of the City of Newburgh;

NOW, THEREFORE, BE IT RESOLVED, by the Council of the City of Newburgh, New York that the City Manager be and he is hereby authorized to enter into a license agreement, in substantially the same form annexed hereto with such other terms and conditions acceptable to the Corporation Counsel, with Scenic Hudson, Inc. to allow access to City-owned property located at or around Crystal Lake for the purpose of making hiking trail and related improvements.

LICENSE AGREEMENT

THIS LICENSE AGREEMENT, dated as of _____, 2017, by and between:

THE CITY OF NEWBURGH, a New York municipal corporation with offices at 83 Broadway, City Hall, Newburgh, New York 12550 ("City" or "Licensor"); and

SCENIC HUDSON, INC., a not-for-profit corporation with an address of One Civic Center Plaza, Suite 200, Poughkeepsie, NY 12603 ("Licensee").

WHEREAS, the City is the owner of several parcels of vacant land located in and around Crystal Lake and Temple Avenue in the City of Newburgh, and more accurately described as Section 41, Block 2, Lot 11.2, Section 50, Block 1, Lot 1.12 and Section 50, Block 1. Lot 5.2 on the official tax map of the City of Newburgh (hereinafter referred to as "the Property"); and

WHEREAS, Licensee desires the license or privilege of gaining access to and performing work upon the premises of Licensor for the purpose of making modest improvements for the benefit of the public and to be used for passive recreation and outdoor education purposes. The work to be done is substantially the location and position shown as set forth on the map or plan hereto attached and made a part hereof and bearing the following title:

Crystal Lake-Site Inventory and Analysis

AND WHEREAS, Licensor is willing to give said license or privilege on the following terms and conditions:

NOW, THEREFORE, in consideration of the premises and of the mutual covenants and conditions hereinafter contained, it is hereby agreed as follows:

Section 1. Grant of License. The City hereby represents that it owns certain real property in and around Crystal Lake and Temple Avenue in the City of Newburgh, and more accurately described as Section 41, Block 2, Lot 11.2, Section 50, Block 1, Lot 1.12 and Section 50, Block 1. Lot 5.2 on the official tax map of the City of Newburgh, and that it has duly authorized this License Agreement. The City hereby grants Licensee a revocable license for Licensee and Licensee's employees, volunteers, agents and contractors, upon the conditions hereinafter stated, the license or privilege of entering upon Licensor's Property, as herein described, and taking thereupon such vehicles, equipment, tools, machinery and other materials as may be necessary, for the purposes of and to perform maintenance, repairs and improvements to property owned by Licensor and used as and for a hiking trail as shown on the attached site inventory and drawing; and to enhance said property, including but not limited to constructing the hiking trail and parking area and installing a trail head kiosk and any and all other work appurtenant thereto.

Section 2. Use of and Access to the Property. Entry to the Property is limited to the use and access necessary to construct and install such improvements as proposed by the Licensee.

Licensee shall install said improvements on said premises in such location and position and as to any such work upon or under property of Licensor in such manner as will be satisfactory to Licensor. Licensee agrees to do such work and perform such work in such manner as will comply fully with the provisions of any laws, ordinances or other lawful authority, obtaining any and all permits required thereby. Licensee shall give Licensor no less than forty-eight (48) hours advance notice of its commencement of work on the Property.

Section 3. Insurance. The Licensee shall not commence or perform work nor operate machinery under this License Agreement until it has obtained all insurance required under this Section 3 and such insurance has been approved by the City.

A. Workers' Compensation Insurance - The Licensee shall take out and maintain during the life of this agreement such Workers' Compensation Insurance for its employees or members to be assigned to the work hereunder as may be required by New York State Law.

B. General Liability and Property Damage Insurance - The Licensee shall take out and maintain during the life of this agreement such general liability and property damage insurance as shall protect it and the City which shall be named as additional insured on all such policies from claims for damages for personal injury including accidental death, as well as from claims for property damage which may arise from operations under this agreement. The amounts of such insurance shall be as follows:

1. General Liability Insurance in an amount not less than $1,000,000.00 for injuries including wrongful death to any one person and subject to the same limit for each person, in an amount not less than $3,000,000.00 on account of any one occurrence.

2. Property Damage Insurance in an amount not less than $50,000.00 for damage on account of all occurrences.

The Licensee shall furnish the above insurance to the City and shall also name the City as an additional named insured in said policies. Such insurance shall be maintained in force during the entire term of this License Agreement.

C. Licensee may retain certain employees, agents, contractors and consultants to perform the subject work. In the contract by which Licensee retains such agents, Licensee and such agents shall provide and maintain insurances as required by this Section 3 and name Licensor as additional insured under insurance coverage concerning Licensee's performance of the work referenced herein.

Section 4. Damages. The relation of the Licensee to the City as to the work to be performed by it under this agreement shall be that of an independent contractor. As an independent contractor, it will be responsible for all damage, loss or injury to persons or property that may arise in or be incurred during the conduct and progress of said performances arising out of the negligent performance, other than those wholly caused by Acts of God. The Licensee shall make good any

damages that may occur in consequence of the performances or any part of it. The Licensee shall assume all blame, loss and responsibility of any nature by reason of the Licensee's neglect or violation of any federal, state, county or local laws, regulations or ordinances applicable to the Licensee and/or the nature of its performance or arising out of its activities licensed hereby.

Section 5. Defense and Indemnity. Licensee shall defend, indemnify and hold the City harmless against any and all claims, actions, proceedings, and lawsuits arising out of or relating to the access and use of the Property under this License Agreement, excepting gross negligence or misconduct by the City.

Section 6. Term of License. The license or privilege hereby given shall commence upon the signing of this licensee agreement and shall expire and terminate without further notice to either party to the other upon the completion of the work by Licensee and its agents, employees and contractors, as confirmed by both the City Engineer and City Planner.

Section 7. Assignment of License; No Sub-Licensing. This License may not be assigned or sub-let to any other party.

Section 8. Termination of License. The City, at its sole discretion and, with or without cause, may, without prejudice to any other rights or remedy it may have, by five (5) days' notice to the Licensee, terminate the agreement.

Section 9. New York Law. This License Agreement shall be construed under New York law and any and all proceedings brought by either party arising out of or related to this License shall be brought in the New York Supreme Court, Orange County.

Section 11. Modification of License Agreement. This License Agreement may not be modified except by a writing subscribed by both parties to this Agreement.

Section 12. It is understood and agreed that no vested right in said premises is hereby granted or conveyed from either party to the other, and that the privileges hereby given are subject to any and all encumbrances, conditions, restrictions and reservations upon or under which the parties held said premises prior to the granting of this license.

Section 13. Licensor acknowledges that the enhancements, improvements and repairs to the subject property shall inure to the benefit of both parties, and shall be satisfactory, adequate and sufficient consideration for the License granted hereunder.

Section 14. Without limitation to the general provisions of this Agreement, it is understood and agreed that said improvements shall be installed in substantially the location and position shown in the attachments hereto, and in accordance with details and specifications as set forth on maps or plans hereto attached and hereby made a part hereof.

Remainder of this page intentionally left blank

WITNESSETH:

THE CITY OF NEWBURGH
LICENSOR

By: _____
Michael G. Ciaravino, City Manager
Per Resolution No.:

SCENIC HUDSON, INC.
LICENSEE

By: _____

Approved as to form:

_____
MICHELLE KELSON
Corporation Counsel

_____
KATHRYN MACK
City Comptroller

Crystal Lake - Site Inventory and Analysis

City of Newburgh, Orange County, NY

August 2017

0 100 200 400 Feet

Analysis Map Key

- Location of Interest
- Formalized Trail Connections
- Possible Vehicle Site Access
- Wide Angle View
- Directional View
- Possible Vehicle Parking

Base Map Key

- City Owned Project Area
- Parcel Division
- Other Tax Parcel
- Building/ Structure
- Lake
- Aquatic Vegetation
- Tree Canopy
- Paved Areas
- State Route/ Highway
- Residential Road
- ATV or Social Trail
- Culvert Stream
- Daylight Stream
- 100 year Flood Line
- Existing Parking

Scenic Hudson's Snake Hill Property (+/- 95 Acres)

Town of New Windsor, Orange County, NY

July 2017

Regional Context

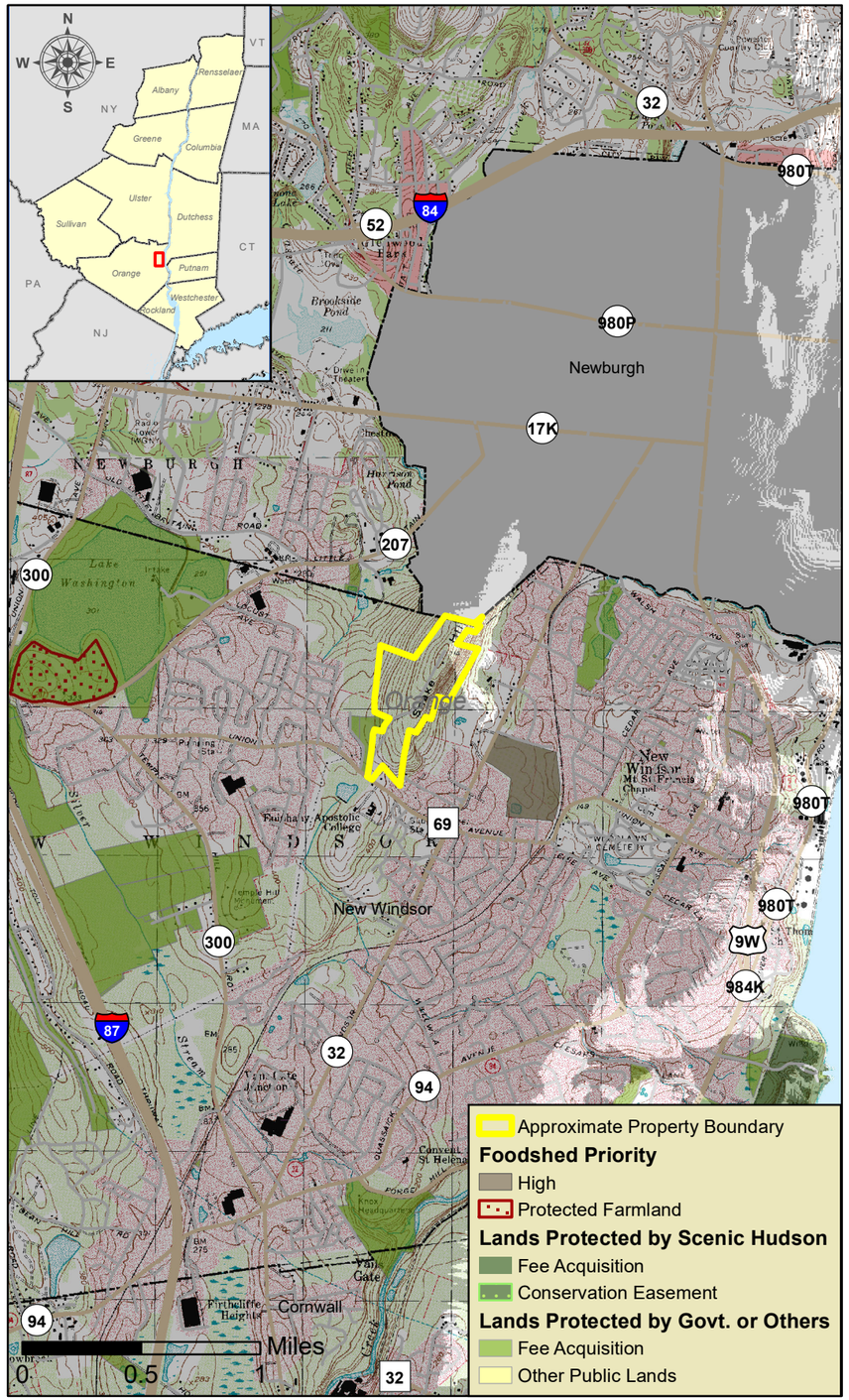

Project Information

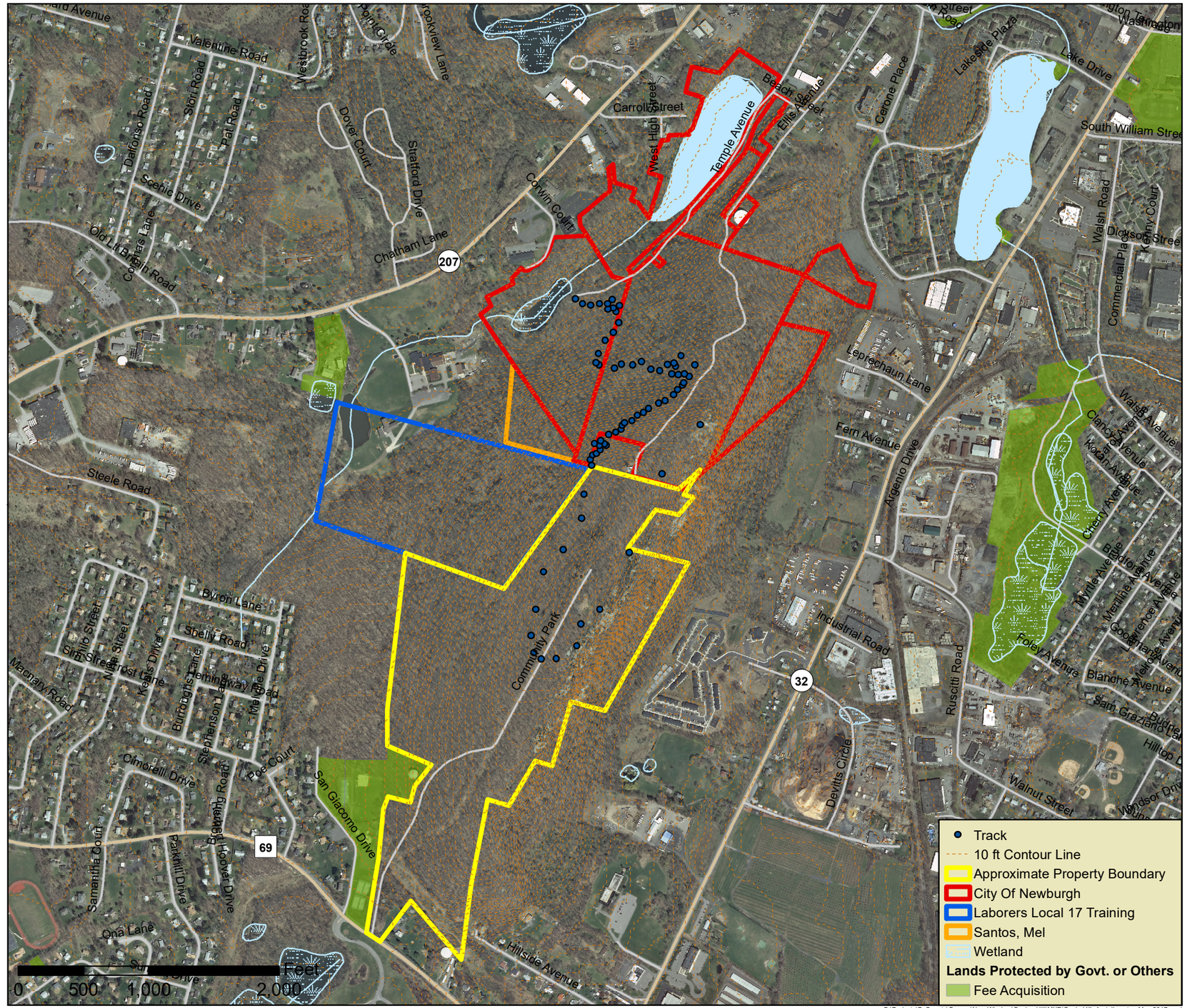

G:\Projects\ByCounty\Orange\New Windsor\Snake_Hill\MXD\SnakeHill_AerialLocator_May 2017.mxd

RESOLUTION NO.: 329 - 2017

OF

NOVEMBER 27, 2017

RESOLUTION SCHEDULING A PUBLIC HEARING FOR DECEMBER 11, 2017 TO HEAR PUBLIC COMMENT CONCERNING THE CITY OF NEWBURGH RESTORE NY GRANT APPLICATION TO SUPPORT THE REDEVELOPMENT OF THE DUTCH REFORMED CHURCH AND THE CITY CLUB BY ALEMBIC COMMUNITY DEVELOPMENT

WHEREAS, by Resolution No. 246-2017 of August 14, 2017, the City Council of the City of Newburgh authorized the City Manager to execute an agreement to stabilize the Dutch Reformed Church and to negotiate on behalf of the City of Newburgh a land development agreement with Alembic Community Development, and its development partners, in connection with the redevelopment of the Dutch Reformed Church, the City Club and 2 Montgomery Street; and

WHEREAS, by Resolution No. 272-2017 of September 25, 2017, the City Council of the City of Newburgh declared its intent to assume Lead Agency status for the approval of a land development agreement with Alembic Community Development pursuant to the State Environmental Quality Review Act; and

WHEREAS, the City of Newburgh intends to apply for a Restore NY grant to support the redevelopment of the Dutch Reformed Church and the City Club and such application requires the City of Newburgh to hold a public hearing to discuss the Restore NY application and the Property Assessment List submitted in the Intent to Apply for Restore NY Funding;

NOW, THEREFORE, BE IT RESOLVED, by the Council of the City of Newburgh, New York, that there is hereby scheduled a public hearing to receive comments concerning the City of Newburgh Restore NY grant application; and that such public hearing be and hereby is duly set for the next regular meeting of the Council to be held at 7:00 p.m. on the 11th day of December, 2017, in the 3rd Floor Council Chambers, 83 Broadway, City Hall, Newburgh, New York.

Application Checklist- Restore NY Communities Initiative

Municipal Name	City of Newburgh	
Item	Yes	N/A
5 years operating pro formas		
Application fee payable to Empire State Development Corporation		
Property Assessment List		
Project Site Map		
Individual Property Packet for all properties		
Up to 2 Façade Photos for all properties		
Letters from local planning/zoning officials stating project compliance		
Written commitment(s) for project financing		
3rd Party Project Estimates		
Credentials of individuals and/or lead entities involved in project		
Non-municipal entity Project Proposal		
SEQR Environmental Assessment Form (EAF)		
SEQR Negative Declaration		
EIS Findings Statement		
SHPO Review Materials		
Proof of Publication of Property Assessment List		
Proof of Publication of Public Hearing Notice		
A true and complete copy of the Municipal Resolution		

Property Assessment List

Municipal Name	City of Newburgh
Project Name	Montgomery Street Project

List and sequentially number all properties submitted for this project. Properties with both a demolition/deconstruction phase AND a rehabilitation/ reconstruction phase must use separate lines to define EACH project phase. **This list must be published in a local daily newspaper for three consecutive days and be the subject of a public hearing.**

#	Site Name /Address	Sq.Ft.	R-Residential C-Commercial	DM-Demolition DC-Deconstruction RH-Rehabilitation RC-Reconstruction	V-Vacant A-Abandoned C-Condemned S-Surplus
1	Dutch Ref. Church, 134 Grand St.	5728	C	RH	V
2	City Club, 120 Grand St.	7128	C	RC	V
1	1	1	1	1	1
2	2	2	2	2	2

RESOLUTION NO.: 330 - 2017

OF

NOVEMBER 27, 2017

A RESOLUTION TO AUTHORIZE THE CONVEYANCE OF REAL PROPERTY KNOWN AS 7 LOCUST STREET (SECTION 25, BLOCK 5, LOT 18) AT PRIVATE SALE TO JIMMY R. MERA FOR THE AMOUNT OF $25,000.00

WHEREAS, the City of Newburgh has acquired title to several parcels of real property by foreclosure *In Rem* pursuant of Article 11 Title 3 of the Real property Tax law of the State of New York; and

WHEREAS, pursuant to Section 1166 of the Real Property Tax Law the City may sell properties acquired by foreclosure *In Rem* at private sale; and

WHEREAS, the City of Newburgh desires to sell 7 Locust Street, being more accurately described as Section 25, Block 5, Lot 18 on the official tax map of the City of Newburgh; and

WHEREAS, the prospective buyer has offered to purchase this property at private sale; and

WHEREAS, this Council has determined that it would be in the best interests of the City of Newburgh to sell said property to the prospective buyer for the sum as outlined below, and upon the same terms and conditions annexed hereto and made a part hereof,

NOW, THEREFORE, BE IT RESOLVED, by the Council of the City of Newburgh, New York, that the sale of the following property to the indicated purchasers be and hereby is confirmed and the City Manager is authorized and directed to execute and deliver a quitclaim deed to said purchaser upon receipt of the indicated purchase price in money order, good certified or bank check, made payable to **THE CITY OF NEWBURGH,** such sums are to be paid on or before March 2, 2018, being approximately ninety (90) days from the date of this resolution; and

Property address	Section, Block, Lot	Purchaser	Purchase Price
7 Locust Street	25 – 5 – 18	Jimmy R. Mera	$25,000.00

BE IT FURTHER RESOLVED, by the Council of the City of Newburgh, New York, that the parcel is not required for public use.

Terms and Conditions Sale
7 Locust Street, City of Newburgh (25-5-18)

STANDARD TERMS:

1. City of Newburgh acquired title to these properties in accordance with Article 11 of the Real Property Tax Law of the State of New York, and all known rights of redemption under said provisions of law have been extinguished by the tax sale proceedings and/or as a result of forfeiture.
2. For purposes of these Terms and Conditions, parcel shall be defined as a section, block and lot number.
3. All real property, including any buildings thereon, is sold "AS IS" and without any representation or warranty whatsoever as to the condition or title, and subject to: (a) any state of facts an accurate survey or personal inspection of the premises would disclose; (b) applicable zoning/land use/building regulations; (c) water and sewer assessments are the responsibility of the purchaser, whether they are received or not; (d) easements, covenants, conditions and rights-of-way of record existing at the time of the levy of the tax, the non-payment of which resulted in the tax sale in which City of Newburgh acquired title; and (e) for purposes of taxation, the purchaser shall be deemed to be the owner prior to the next applicable taxable status date after the date of sale.
4. The properties are sold subject to unpaid school taxes for the tax year of 2017-2018, and also subject to all school taxes levied subsequent to the date of the City Council resolution authorizing the sale. The purchaser shall reimburse the City for any school taxes paid by the City for the tax year 2017-2018, and subsequent levies up to the date of the closing. Upon the closing, the properties shall become subject to taxation. Water and sewer charges and sanitation fees will be paid by the City to the date of closing.
5. **WARNING: FAILURE TO COMPLY WITH THE TERMS OF THIS PARAGRAPH MAY RESULT IN YOUR LOSS OF THE PROPERTY AFTER PURCHASE**. **The deed will contain provisions stating that the purchaser is required to rehabilitate any building on the property and bring it into compliance with all State, County and Local standards for occupancy within (18) months of the date of the deed. Within such eighteen (18) month time period the purchaser must either: obtain a Certificate of Occupancy for all buildings on the property; make all buildings granted a Certificate of Occupancy before the date of purchase fit for the use stated in such Certificate of Occupancy; or demolish such buildings. The deed shall require the purchaser to schedule an inspection by City officials at or before the end of the eighteen (18) month period. If the purchaser has not complied with the deed provisions regarding rehabilitation of the property and obtained a Certificate of Occupancy or Certificate of Compliance by that time, then the title to the property shall revert to the City of Newburgh. The deed shall also provide that the property shall not be conveyed to any other person before a Certificate of Occupancy or Certificate of Compliance is issued. A written request made to the City Manager for an extension of the eighteen (18) month rehabilitation period shall be accompanied by a non-refundable fee of $250.00 per parcel for which a request is submitted. The City Manager may, in his sole discretion and for good cause shown, grant one extension of time to rehabilitate of up to, but not to exceed, three (3) months. Any additional request thereafter shall be made in writing and placed before the City Council for their consideration**.
6. The property is sold subject to an owner-occupancy restriction. The purchaser has agreed to purchase the property subject to the five (5) year owner occupancy restriction shall, within 18 months of the delivery of the deed, establish his domicile and principal residence at said premises and maintain his domicile and principal residence at said premises for a period of at least five (5) years thereafter, provided that within said five (5) year period, the purchaser may convey said premises to another who shall also maintain their domicile and principal residence at said premises for said period. This shall be set forth as a restrictive covenant in the deed, subject upon its breach, to a right of re-entry in favor of the City of Newburgh. This shall be in addition to all other provisions, covenants and conditions set forth in the Terms of Sale.

7. Notice is hereby given that the property is vacant and unoccupied. The parcel is being sold subject to the City's Vacant Property Ordinance and all provisions of law applicable thereto. At closing, the purchaser will be required to register the property and remit the vacant property fee. It is the sole responsibility of the purchaser to redevelop such parcel in accordance with same.
8. All purchasers are advised to personally inspect the premises and to examine title to the premises prior to the date upon which the sale is scheduled to take place. Upon delivery of the quitclaim deed by the City of Newburgh to the successful purchaser, any and all claims with respect to title to the premises are merged in the deed and do not survive.
9. No personal property is included in the sale of any of the parcels owned by City of Newburgh, unless the former owner or occupant has abandoned same. The disposition of any personal property located on any parcel sold shall be the sole responsibility of the successful purchaser following the closing of sale.
10. The City makes no representation, express or implied, as to the condition of any property, warranty of title, or as to the suitability of any for any particular use or occupancy. Property may contain paint or other similar surface coating material containing lead. Purchaser shall be responsible for the correction of such conditions when required by applicable law. Property also may contain other environmental hazards. Purchaser shall be responsible for ascertaining and investigating such conditions prior to bidding. Purchaser shall be responsible for investigating and ascertaining from the City Building Inspector's records the legal permitted use of any property prior to closing. Purchaser acknowledges receivership of the pamphlet entitled "Protecting Your Family from Lead in Your Home." Purchaser also acknowledges that he/she has had the opportunity to conduct a risk assessment or inspection of the premises for the presence of lead-based paint, lead-based paint hazards or mold.
11. The entire purchase price and all closing costs/fees must be paid by money order or guaranteed funds to the City of Newburgh Comptroller's Office on or before March 2, 2018. Such closing costs/fees may include, but are not limited to: recording fees, tax adjustments as of the day of closing, fuel oil adjustments, and applicable condominium charges (e.g. monthly maintenance charges, assessment charges, transfer buy-in fees, and/or closing package ordering fees). *The City of Newburgh does not accept credit card payments for the purchase price and closing costs/fees.* **The City is not required to send notice of acceptance or any other notice to a purchaser.** At closing, purchaser, as grantee, may take title as a natural person or as an entity wherein purchaser is an officer or managing member of said entity. The City Manager may, in his sole discretion and for good cause shown, grant one extension of time to close title of up to, but not to exceed, sixty (60) additional days. No request shall be entertained unless in writing, stating the reasons therefor, and unless accompanied by a fee of $250.00 per parcel for which a request is submitted. The fee shall be in addition to all other fees and deposits and shall not be credited against the purchase price and shall not be returnable. Any additional request made thereafter shall be made in writing and placed before the City Council for their consideration.
12. In the event that a sale is cancelled by court order, judgment, the Comptroller or the Newburgh City Council, the successful bidder shall be entitled only to a refund of the purchase money paid with interest. Purchaser agrees that he shall <u>not</u> be entitled to special or consequential damages, attorney's fees, reimbursement for any expenses incurred as a result of ownership, improvements of property, or for taxes paid during period of ownership, and this agreement by the purchaser is a material condition of the sale.
13. Sale shall be final, absolute and without recourse once title has closed and the deed has been recorded. In no event, shall City of Newburgh be or become liable for any defects in title for any cause whatsoever, and no claim, demand or suit of any nature shall exist in favor of the purchaser, his heirs, successors or assigns, against City of Newburgh arising from this sale.
14. Conveyance shall be by quitclaim deed only, containing a description of the property as it appeared on the tax roll for the year upon which the City acquired title or as corrected up to date of deed. The deed will be recorded by the City upon payment in full of the purchase price, buyer's premium, and closing fees/costs. Possession of property is forbidden until the deed is recorded conveying title to the purchaser. **Title vests upon recording of deed.**

15. Upon closing, the City shall deliver a quitclaim deed conveying all of its right, title and interest in the subject property, which deed shall be drawn by the City Corporation Counsel. The City shall not convey its interest in any street, water, sewer or drainage easement, or any other interest the City may have in the property. The City shall only convey that interest obtained by the City pursuant to the judgment rendered in an *in rem* tax foreclosure action filed in the Orange County Clerk's Office.
16. The description of the property shall be from the City of Newburgh Tax Map reference or a survey description certified to the City of Newburgh and provided to the City Corporation Counsel by the purchaser at least thirty (30) days in advance of closing title and approved by the City's Engineer.
17. Evictions, if necessary, are solely the responsibility of the purchaser after closing and recording of the deed.
18. By acknowledging and executing these Terms & Conditions, the purchaser certifies that he/she is not representing the former owner(s) of the property against whom City of Newburgh foreclosed and has no intent to defraud City of Newburgh of the unpaid taxes, assessment, penalties and charges which have been levied against the property. The purchaser agrees that neither he/she nor his/her assigns shall convey the property to the former owner(s) against whom City of Newburgh foreclosed within 24 months subsequent to the auction date. If such conveyance occurs, the purchaser understands that he/she may be found to have committed fraud, and/or intent to defraud, and will be liable for any deficiency between the purchase price at auction and such sums as may be owed to City of Newburgh as related to the foreclosure on the property and consents to immediate judgment by City of Newburgh for said amounts.

RESOLUTION NO.: 331 - 2017

OF

NOVEMBER 27, 2017

A RESOLUTION AUTHORIZING THE CITY MANAGER TO ENTER INTO AN AGREEMENT WITH THE NEWBURGH MINISTRY, INC. TO ESTABLISH A WARMING CENTER AT 104 SOUTH LANDER STREET

WHEREAS, The Newburgh Ministry, Inc. (the "Newburgh Ministry") presently provides overnight shelter to homeless individuals within the City of Newburgh; and

WHEREAS, the City of Newburgh (the "City") and the Newburgh Ministry recognize the need to provide additional overnight shelter to homeless individuals during the cold weather season; and

WHEREAS, the City owns certain property located at 104 South Lander Street and more accurately described as Section 48, Block 2, Lot 25 on the official tax map of the City of Newburgh, which can provide a location for an overnight shelter during the cold weather season; and

WHEREAS, the Newburgh Ministry and the City recognize the need to formalize their respective obligations in providing additional overnight shelter to homeless individuals during the cold weather season through a formal agreement; the same being in the best interests of the City of Newburgh;

NOW, THEREFORE, BE IT RESOLVED, by the Council of the City of Newburgh, New York that the City Manager be and he is hereby authorized to enter into an agreement, in substantially the same form annexed hereto with such other terms and conditions acceptable to the Corporation Counsel, with The Newburgh Ministry, Inc. to establish an overnight warming center at 104 South Lander Street.

RESOLUTION NO.: ____332___ -2017

OF

NOVEMBER 27, 2017

A RESOLUTION TO CERTIFY THE BASE PERCENTAGES, CURRENT PERCENTAGES, CURRENT BASE PROPORTIONS AND ADJUSTED BASE PROPORTIONS UNDER THE HOMESTEAD OPTION OF ARTICLE 19 OF THE REAL PROPERTY TAX LAW OF THE STATE OF NEW YORK

BE IT RESOLVED, by the Council of the City of Newburgh, New York, that this Council does hereby certify the base percentages, current percentages, current base proportions and the adjusted base proportions as set forth on the annexed certificates, pursuant to Article 19 of the Real Property Tax Law of the State of New York.

RP-6703

NEW YORK STATE OFFICE OF REAL PROPERTY SERVICES
16 SHERIDAN AVENUE, ALBANY, NY 12210-2714

1/21/17

CERTIFICATE OF ADJUSTED BASE PROPORTIONS PURSUANT TO ARTICLE 19, RPTL
FOR THE 2017 ASSESSMENT ROLL

Approved Assessing Unit: City of Newburgh, 331100
Name of Portion: City of Newburgh, 331100
Reference Roll: 2016
Levy Roll: 2017

DETERMINATION OF PORTION CLASS NET CHANGE IN ASSESSED VALUE DUE TO PHYSICAL AND QUANT
EQUALIZATION CHANGES AND COMPUTATION OF CLASS CHANGE IN LEVEL OF ASSESSMENT FACTOR

Section I

Class	(A) Total Assessed Value on the Reference Roll Excluding roll section 5	(B) Total Assessed Value of Physical and Quantity Increases between the Reference Roll and Levy Roll	(C) Total Assessed Value of Physical and Quantity Decreases between the Reference Roll and Levy Roll	(D) Net Assessed Value of Physical and Quantity Changes (B-C)	(E) Surviving Total Assessed Value on the Reference Roll (A-C)
Homestead	532,721,210	2,266,020	1,045,500	1,255,520	530,771,710
Nonhomestead	326,042,805	4,403,605	1,283,180	3,120,800	324,759,605

Class	(F) Total Assessed Value of Equalization Increases between the Reference Roll and Levy Roll	Total Assessed Value of Equalization Decreases between the Reference Roll	(H) Net Equalization Changes (F-G)	(I) Change in Level of Assessment Factor (H/E)+1
Homestead	15,691,840	16,187,500	(585,660)	0.99893
Nonhomestead	15,390,491	5,618,875	9,771,612	1.03009

COMPUTATION OF PORTION CLASS ADJUSTMENT FACTOR

Section II

Class	(J) Taxable Assessed Value on the Levy Roll Excluding roll section5	(K) Taxable Assessed Value on the Levy Roll at the Reference Roll Level of Assessment (J/I)	(L) Assessed Value of Special Franchise on the Levy Roll at the Reference Roll Level of Assment	(M) Total Taxable Assessed Value on the Levy Roll at the Reference Roll Level of Assessment (K+L)	(N) Taxable Assessed Value on the Reference Roll	(O) Class Adjustment Factor (M/N)
Homestead	513,867,410	514,105,308	0	514,105,308	512,637,839	1.00286
Nonhomestead	332,567,303	322,649,197	42,119,631	364,767,828	359,226,856	1.01542

COMPUTATION OF ADJUSTED BASE PROPORTIONS

Section III

Class	(P) Current Base Proportions	(Q) Current Base Proportions adjusted for Physical and Quantity Changes (P*O)	(R) Adjusted Base Proportions (Q/sum of Q)
Homestead	50.77026	50.91566	50.45910
Nonhomestead	49.22975	49.99916	49.54090
Total	100.00000	100.90471	100.00000

CERTIFICATION

I, the clerk of the legislative body of the approved assessing unit identified above, hereby certify that the legislative body determined on _____ base percentages, current percentages, and current base proportions as set forth herein for the assessment roll and portion as identified above.

_____
Signature

_____
Title

RP-6701

NEW YORK STATE OFFICE OF REAL PROPERTY SERVICES
16 SHERIDAN AVENUE, ALBANY, NY 12210-2714

11/21/17

CERTIFICATE OF BASE PERCENTAGES, CURRENT PERCENTAGES AND CURRENT BASE PROPORTIONS PURSUANT TO ARTICLE 19, RPTL, FOR THE LEVY OF TAXES ON THE 2017 ASSESSMENT ROLL

Approved Assessing Unit: City of Newburgh, 331100
Name of Portion: City of Newburgh, 331100

DETERMINATION OF BASE PERCENTAGES

Section I

Class	(A) 1991 Taxable Assessed Value	(B) 1991 Class Equalization Rate	(C) Estimated Market Value A/(B/100)	(D) Base Percentages (C/sum of C)
Homestead	179,193,709	41.24	434,514,328	64.7177
Nonhomestead	111,241,235	46.96	236,885,083	35.2823
Total	290,434,944		671,399,411	100.0000

DETERMINATION OF CURRENT PERCENTAGES

Section II

Class	(E) Prior Year Taxable Assessed Value (Inc. Spec. Fran.)	(F) Prior Year Class Equalization Rate	(G) Estimated Market Value E/(F/100)	(H) Current Percentages (G/sum of G)
Homestead	512,637,639	100	512,637,639	58.79786
Nonhomestead	359,226,856	100	359,226,856	41.20214
Total	871,864,495		871,864,495	100.00000

DETERMINATION OF CURRENT BASE PROPORTIONS

Section III

Class	(I) Local Base Proportion for the 1992 Assessment Roll	(J) Updated Local Base Proportion I*(H/D)	(K) Prospective Current Base Proportion Part (J) Prorated to 100.00 (J/sum of J)	(L) Adjusted Base Proportion used for Prior Tax Levy	(M) % difference between prior Adjusted Base Proportion and Prospective Current Base Proportion ((K/L)-1*100)	(N) Maximum Current Base Proportion (L*1.05)	(O) Current Base Proportion
Homestead	57.00000	51.78610	50.77025	51.7413	-1.88		50.77025
Nonhomestead	43.00000	50.21477	49.22975	48.2587	2.01		49.22975
Total	100.00000	102.00087	100.00000	100.00000			100.00000

CERTIFICATION

I, the clerk of the legislative body of the approved assessing unit identified above, hereby certify that the legislative body determined on _____ base percentages, current percentages, and current base proportions as set forth herein for the assessment roll and portion as identified above.

_____ signature

_____ title

_____ date

Local Adjustments to the Adjusted Base Proportions

The municipality may make certain adjustments to the ABPs.
See Subsection 1903-4(c) of the Real Property Tax Law

City of Newburgh 2017

STEP 1 - Subtract the Adjusted Base Proportion for the Homestead Class from the Current Percentage for the Homestead Class

Current Percentage for Homestead Class (Part I of form RP-6701)	58.79786
Adjusted Base Proportion for Homestead Class (column R of form RP-6703) -	50.45910
Difference	8.33876

STEP 2 - Take the Difference computed in STEP 1 and multiply it by 10%, 20%, 25%, 30%, 40%, 50%, 60%, 70%, 75%, 80%, and 90%. Add this amount to the Homestead Adjusted Base Proportion.

Select a Percentage	Amount to be added to Homestead ABP		POSSIBL WHICH MA	
			Homestead	NonHomestead
			50.45910	49.54090
10%	0.83388		51.29297	48.70703
20%	1.66775		52.12685	47.87315
25%	2.08469		52.54379	47.45621
30%	2.50163		52.96072	47.03928
40%	3.33550		53.79460	46.20540
50%	4.16938		54.62848	45.37152
60%	5.00326		55.46235	44.53765
70%	5.83713		56.29623	43.70377

RESOLUTION NO.: 333 - 2017

OF

NOVEMBER 27, 2017

A RESOLUTION ADOPTING THE BUDGET FOR THE FISCAL YEAR 2018

WHEREAS, the City Manager, on October 10, 2017, submitted to the City Council of the City of Newburgh, New York, a detailed estimate, including the "Manager's Proposed Fiscal Year 2018 Budget" and the "Manager's Proposed Personnel Analysis Book" of same date, of revenues and expenditures necessary and proper for all municipal activities accounted for in the General, Water, Sewer, Sanitation and Self-Insurance Funds during the fiscal year of 2018; and

WHEREAS, such detailed estimates have been filed in the City Clerk's Office as required by the Charter of the City of Newburgh so that said estimates may be inspected by anyone interested, and a public hearing was held on November 13, 2017 in reference to said estimates for any item thereof; and

WHEREAS, the Council has made such changes, alteration, corrections and amendments to the said budget as it appears to said Council to be proper, including incorporating such changes as deemed necessary in response to the New York State Office of the State Comptroller's budget review report # B17-6-18 dated November 14, 2017; and

NOW, THEREFORE, BE IT RESOLVED, that the Council of the City of Newburgh, New York does hereby approve, determine and adopts the budget for the year 2018 as appears in the annexed "City Council Adopted Fiscal Year 2018 Budget" on November 27, 2017; and

BE IT FURTHER RESOLVED, that the sum of $19,904,325 be levied and raised on account of City taxes for the year 2018 on all the taxable property in the City of Newburgh according to the valuation of the last assessment roll of said City for State, County and City purposes, being $513,557,410 for Homestead Properties and $373,367,317 for Non-Homestead Properties, including special franchise assessments, in accordance with the Real Property Tax Law of the State of New York; and

BE IT FURTHER RESOLVED, that the City Collector is authorized and directed to cause said amount of $19,904,325 to be extended and apportioned on said assessment roll at $19.55681for Homestead properties and $26.41040 for Non-Homestead Properties on every $1,000 of taxable real property, including special franchise assessments; and

BE IT FURTHER RESOLVED, that the required sewer, water and sanitation fees for the taxable and non-taxable properties for the year 2018 is as set forth in Section 163-1 of the City Code of Ordinances; and

BE IT FURTHER RESOLVED, that the City Collector is authorized and directed to cause any and all amounts reported as omitted taxes to be levied against the real property subject to said omitted taxes and to cause the amounts reported by the City Collector as overdue and unpaid water rents, sewer rents and sanitation user fees, and unpaid charges of property abatement, with the interest and penalties thereon, to be added to the tax levied against the real property for which or in connection with which such water, sewer and sanitation was provided; and

BE IT FURTHER RESOLVED, that said City tax roll shall be delivered to the City Collector on the 2nd day of January 2018, signed by the City Manager and under the seal of the City, directing and commanding said City Collector to receive and collect in the manner provided by the law for the levying and collecting of County taxes by City Collectors, these several amounts in the roll specified as against the persons or property therein mentioned and described, and that said warrant shall direct the City Collector to collect said assessments in four equal installments as follows:

The first installment commencing on the 2nd day of January 2018, and collect up to and including the 6th day of February 2018, without fees, and to add 5% from the 7th day of February 2018, up to and including the 1st day of April 2018.

The second installment commencing on the 1st day of March 2018, and collect up to and including the 6th day of April 2018, without fees, and to add 5% from the 7th day of April 2018, up to and including the 30th day of May 2018.

The third installment commencing on the 1st day of May 2018, and collect up to and including the 6th day of June 2018, without fees, and to add 5% from the 7th day of June 2018, up to and including the 30th day of July, 2018.

The fourth installment commencing on the 1st day of July 2018, and collect up to and including the 6th day of August 2018, without fees, and to add 5% from the 7th day of August 2018, up to and including the 1st day of October, 2018.

In addition, thereto, for all late payments remaining unpaid for ninety (90) days after the first date designated for the collection of same, there shall be added an additional penalty in the amount of 10% per annum computed from said first date of collection; and

BE IT FURTHER RESOLVED, that the amounts, when collected, be deposited daily with the Key Bank of NY, N.A., Chase, TD Bank, Sterling National Bank, or in any of the said banks in compliance with the requirements set forth in the Newburgh Fiscal Recovery Act by said City Comptroller and credited and applied to the several respective funds and accounts as stated in the Adopted Budget for taxes now confirmed and approved by said City Council, including credit balances heretofore appropriated.